http://www.adsequip.com/

Installation Manual of Beyond 401 Delivery System

P/N:8024061 Version：A Date：2017-08-01

Copyrights

ADS makes no warranty of any kind with regard to this material , including but not limited to, the implied warranties of merchantability and fitness for a particular purpose. ADS shall not be held liable for any errors contained herein or any consequential or other damages concerning furnishing, performance or use of this material. The information in this document is subject to change without notice . If you find any problems in the documentation, please report them to us in writing. ADS does not warrant that this document is error-free.
No part of this document may be copied, reproduced, altered, or transmitted in any form or by any means, electronic or mechanical, including photocopying, recording, or by any information storage and retrieval system, without prior written permission from ADS.
The document is intended to be used in conjunction with the equipment.

Comments and feedback

Please contact us if you have any feedback and opinions on this document：
Add: 1590 S Milliken Ave., unit A, Ontario, CA 91761
Tel: (626) 620 0456
E-mail : sales@adsequip.com
http://www.adsequip.com/

Product service

If you want to get service information, please contact the local dealer authorized by ADS company.
Technical support tel: 800 488 9708

CONTENTS

1 Introduction……1
1.1 Products information……1
1.2 Symbols explanation……1
2 Compositions……3
3 Dimensions……4
4 Specifications……5
5 Preparations……5
5.1 Attentions……5
5.2 Tools recommended……6
5.3 Installation sequence……7
6 Installation……8
6.1 Install the water unit……8
6.2 Install assistant unit……14
6.3 Install the cuspidor……17
6.4 Install the delivery head……21
6.4.1 The installation of dental chair and compass arm ……21
6.4.2 Install the delivery head……22
6.4.3 Adjustment of Level arm for delivery head……27
6.5 Install the dental light(Option)……28
6.6 Install the foot control…… 32
6.7 Connection of line for junction box…… 33
7 Water & air diagrams…… 35

1 Introduction

1.1 Products information

- **Name**：Delivery system
- **Model**：**Beyond401**
- **Working conditions**：

① Ambient temperature：5 ℃～40 ℃；

② Relative humidity：≤ 80％；

③ Nominal Voltage：AC110 V±22 V；

④ Nominal Frequency：60 Hz±1 Hz；

⑤ Water pressure：29psi～58psi；

⑥ Input air pressure ：72.5psi~101.5psi， Air flow ≥50 L/min.

Unit conversion	
MPa	psi
0.2MPa	29psi
0.4MPa	58psi
0.6MPa	87psi
0.8MPa	116psi

1.2 Symbols explanation

Table 1

Symbols	Explanations
Manufacturer	EU Representative
Manufacturing Date	Serial Number
Handle with Care	Keep Dry

Symbols	Explanations
Refer to Instructions	Caution!
Refer to Attached Document.	Backrest down
Avoid Electric Shock	Backrest up
Ground Protection	Chair down
Setup Button	Chair up
Spitting position	Program chair position 1
Program chair position 2	Program chair position 3

2 Compositions

The system is composed by following components.

Figure 1 Delivery system

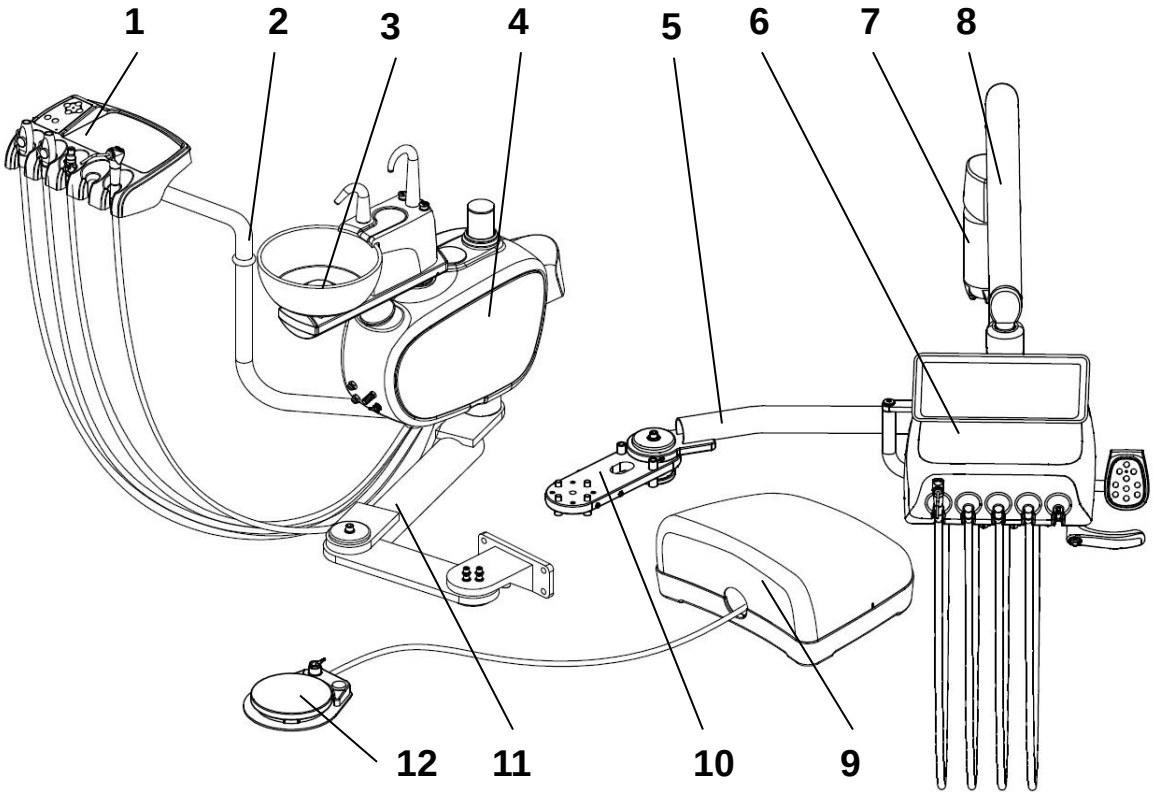

Item	Component	Item	Component
1	Assistant's tray	7	Water bottle
2	Assistant arm	8	Level arm
3	Cuspidor	9	Junction box
4	Water unit	10	Adapter
5	Rotary arm	11	Connection arm of water unit
6	Delivery head	12	Foot control

3 Dimensions

Size:inch

Figure 2

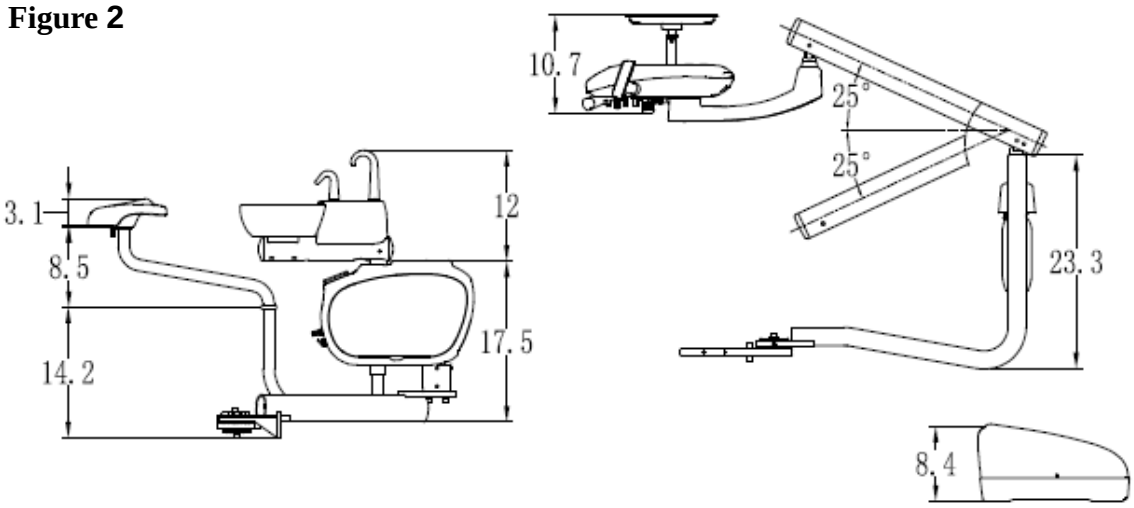

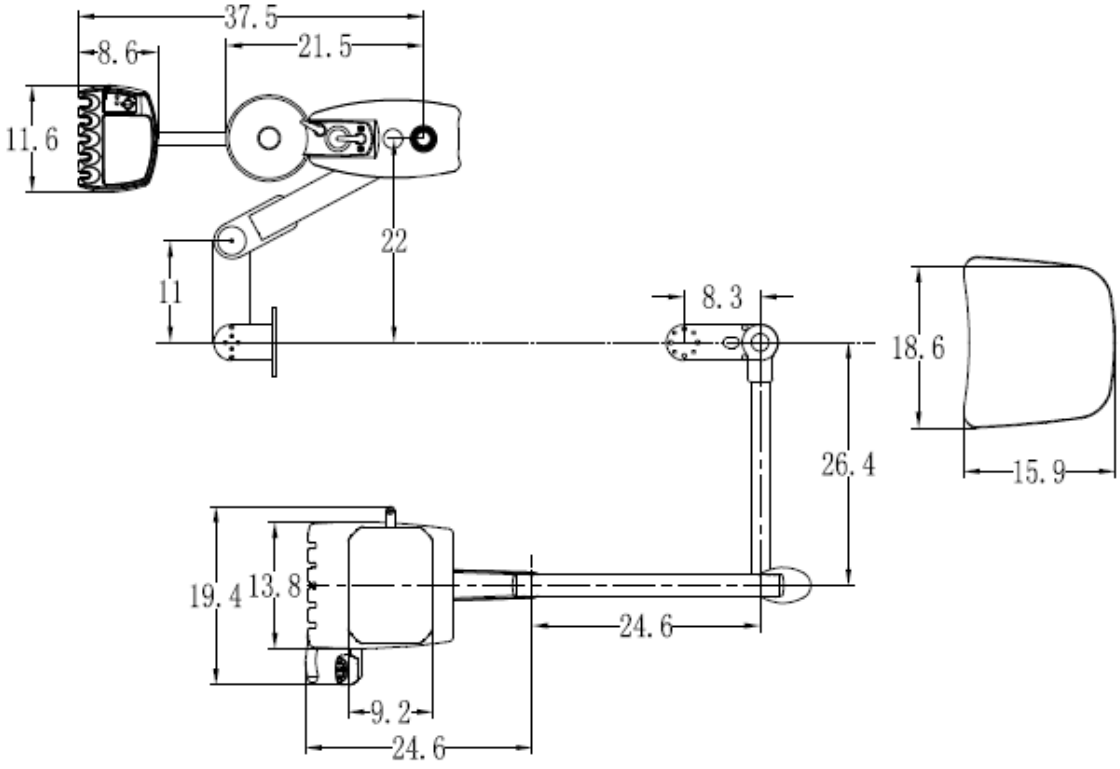

4 Specifications

Table 2

Light illuminance	8000-40000 Lux
Maximum load of Dentist Unit tray	2.5kg
Ambient temperature	5 ℃～40 ℃
Air supply pressure	72.5psi~101.5psi
Water supply pressure	29~58psi

5 Preparations

5.1 Attentions

Before install the unit, you should:

- Confirm the floor construction is safety to support the chair and clean.
- Apply two manually operated valves for the air and water source.
- Exhaust the dirty water and air before connecting.

Before install the unit, please read the manual carefully:

- Input voltage AC 110V，60Hz.
- Make sure the dental unit is well-grounded.
- All the electrical components and connections should be made by an authorized technician.
- Only fuse and accessories recognized by ADS technician can be used.
- This device should not operate in the environment of high temperature, high humidity, vibration flammability, unbalance, or dusty.
- Only the authorized spare parts can be used in this device.
- This device can not be used in the environment of strong magnetic, electromagnetic.

5.2 Tools recommended

The tools and instruments need to prepare before installation.

Table 3

	Electrical drill		Pincers
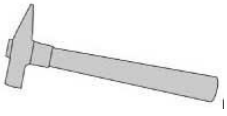	Hammer	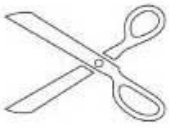	Scissors
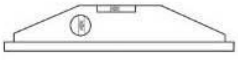	Leveling instrument		Flat-bladed Screw driver
	Phillip screw driver		Allen wrench
	Spanner		Hexagon socket wrench

5.3 Installation sequence

Installation modules of Beyond401 system. Install the modules in following sequence.

Figure 3

1 Water unit

2 Compass arm set

3 Classic dentist unit

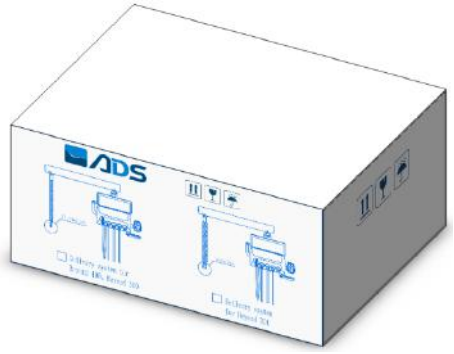

4 Dental light unit

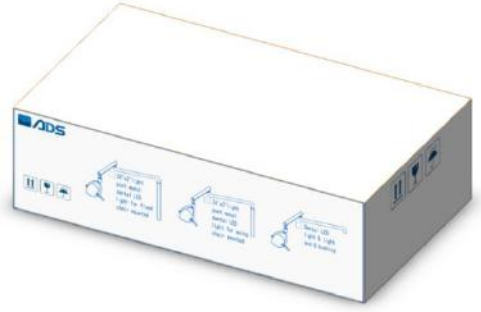

5 Junction box unit

Notice:
Each box contains all the parts that belong to the module .

6 Installation

It is necessary to check whether the system and its accessories are damaged after unpacking. In addition, please check all accessories according to the accessories list. Install the system in the following steps:

6.1 Install the water unit

Default installation method (Water unit is installed to the left of the patient)

1.Before installing the water unit, take out the screw(Socket head set screw of M6*30) on the connection arm(figure A), and let the connection arm 18° rotating outward.

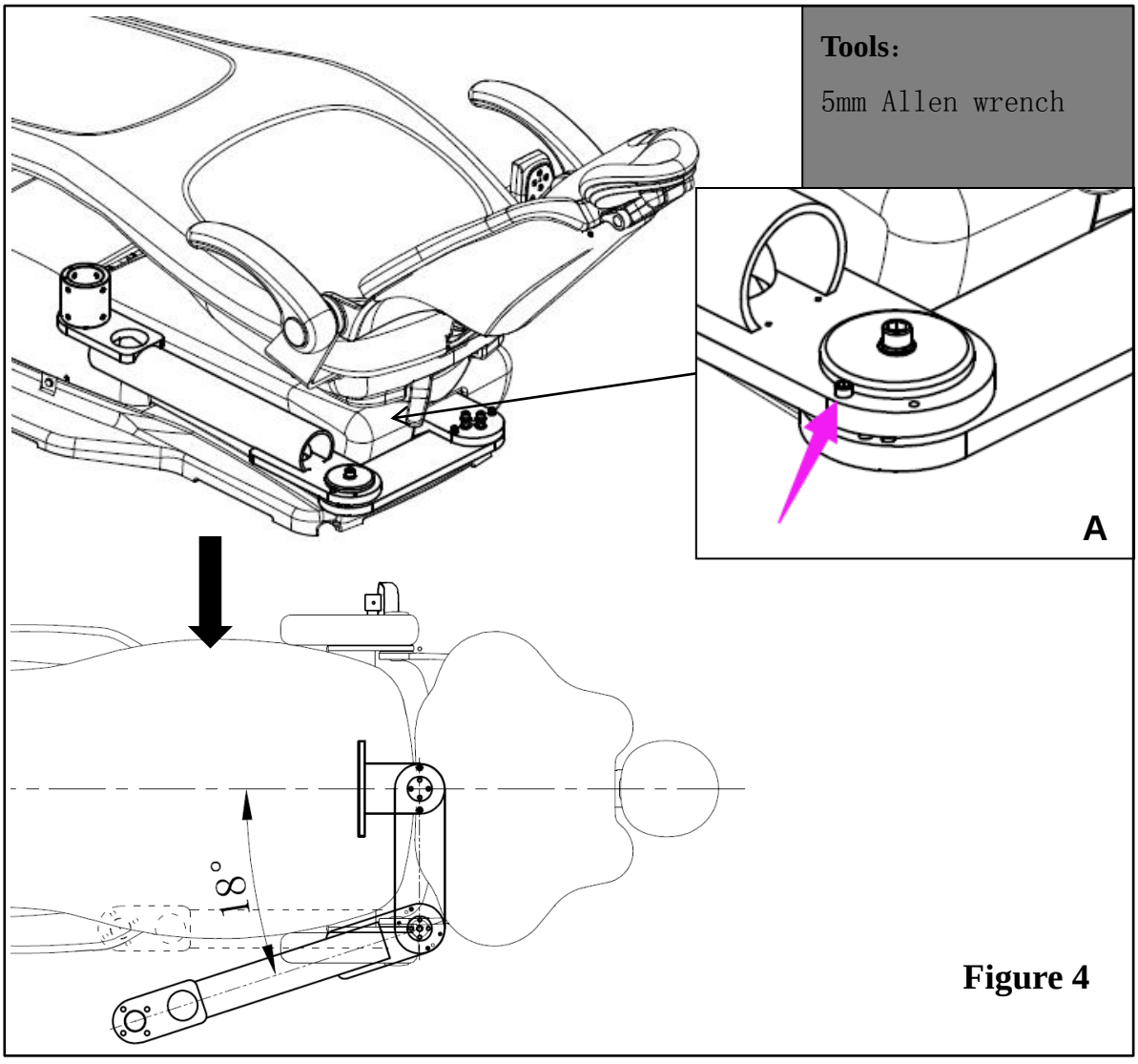

Figure 4

2. Lock the Socket head set screw of M6*30 from bottom to top (figure B); The other one also needs to be locked (figure C).

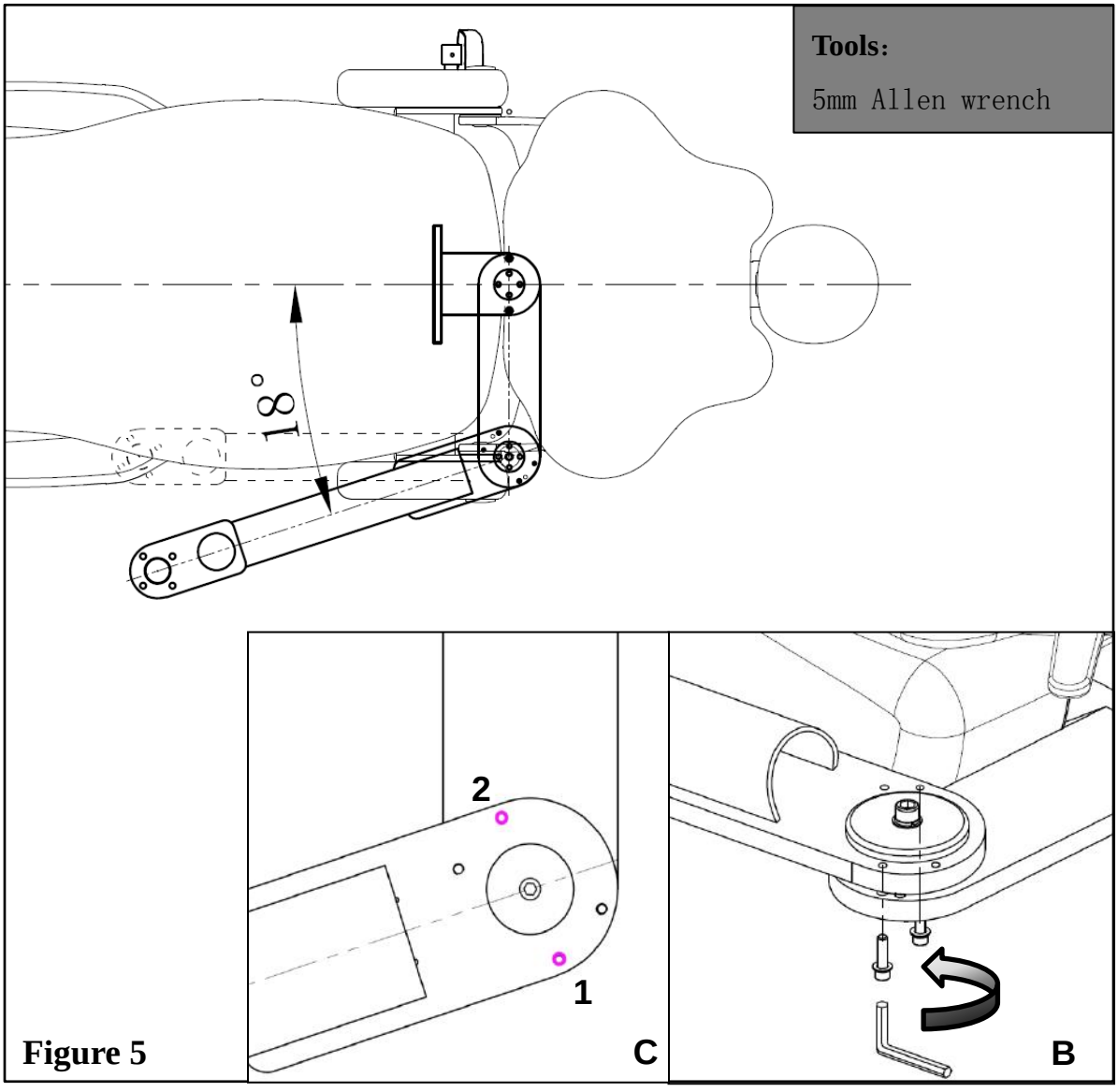

Figure 5

3. Put the water unit on the seat of the chair.

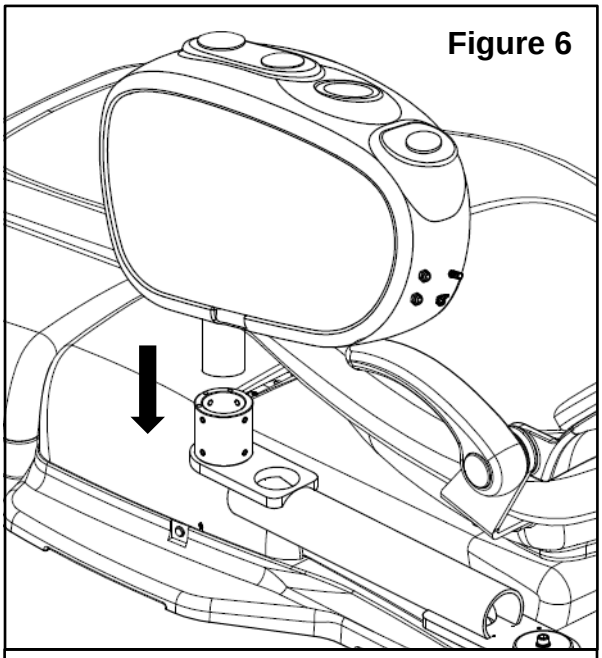

4. Level the water unit with a level ruler, and lock 8 pcs Soket head set screw of M8*10 on the seat.

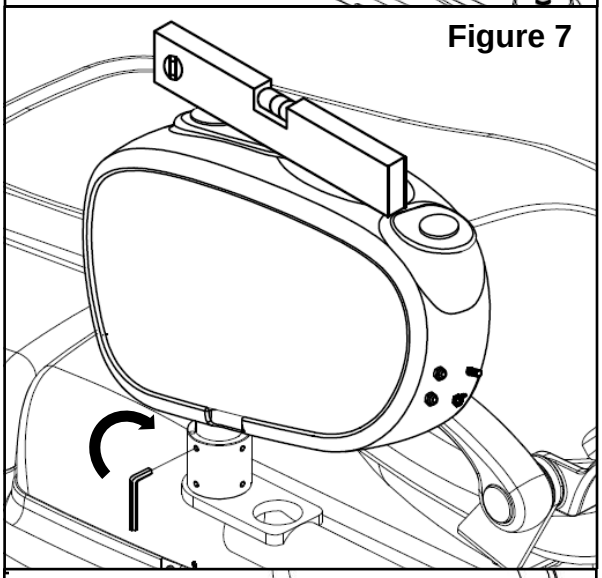

5. Use 4pcs M5*12 flat-head stainless steel screws to fix the water bottle decorative cover on the water bottle fixing stand of the water unit.

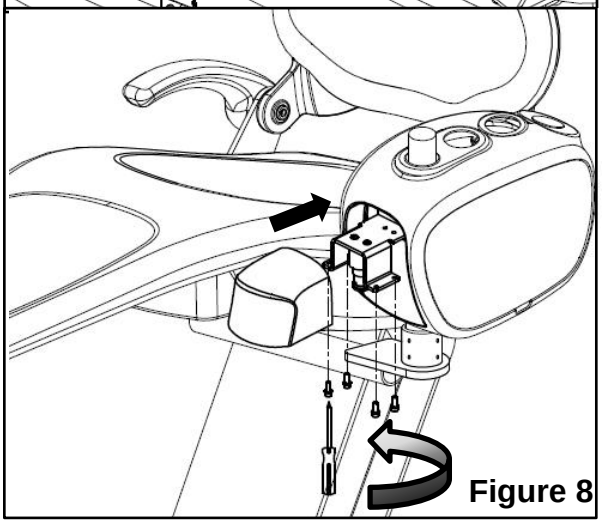

Installation method 1 which water unit is installed to the right of the patient(Before installing the water unit)

1. If you need to install the water unit in the right hand side, you need to loosen the screws on the mount, adjust the arm to the right hand side and lock the screws.

2. Refer to the previous page to install the water unit.

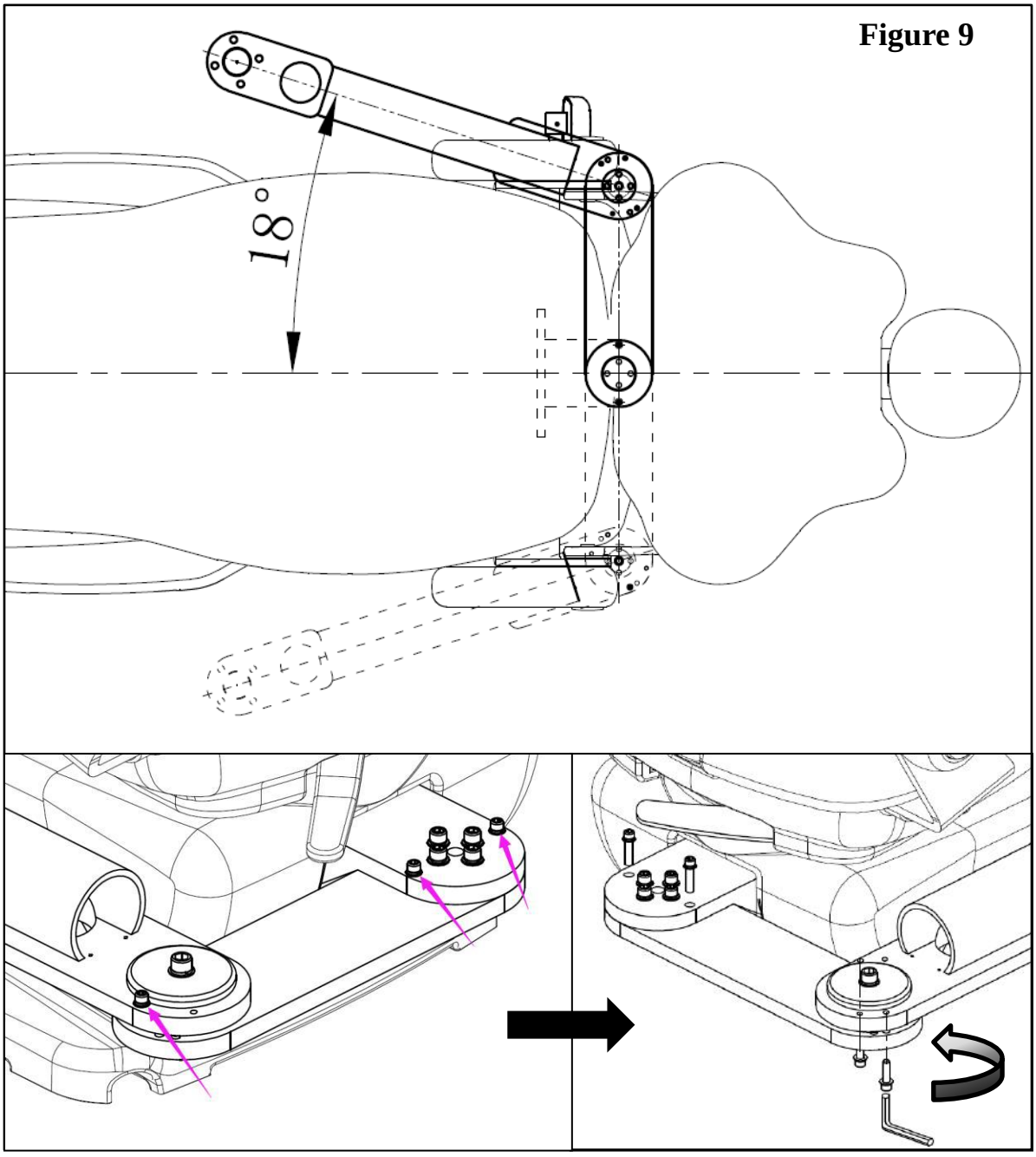

Installation method 2 which water unit is installed to the right of the patient(The water unit has been installed)

If you need to change the water unit to the right hand side, you need to loosen the screws on the mounting seat, adjust the rotating arm to the right hand side and then lock the screws.

1. Loosen the screws as shown.

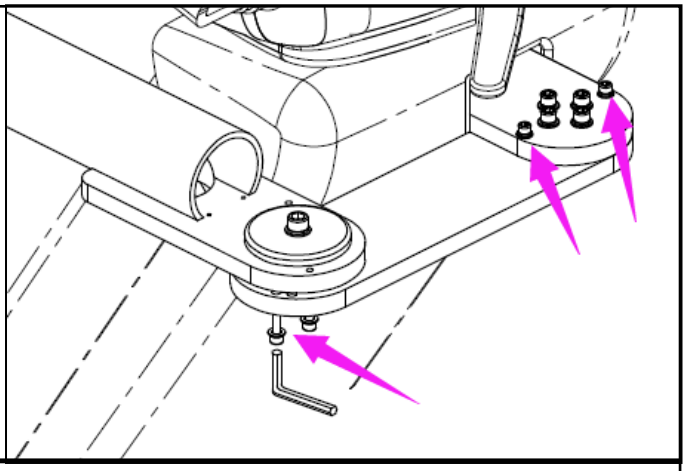

Figure 10

2. Rotate the arm as shown.

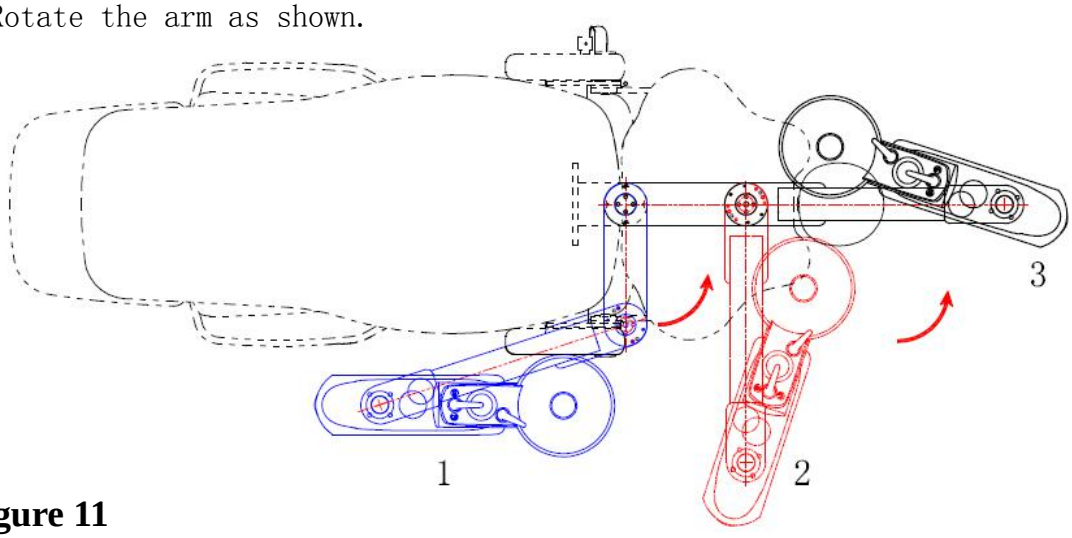

Figure 11

3. Loosen lock screw of water unit.

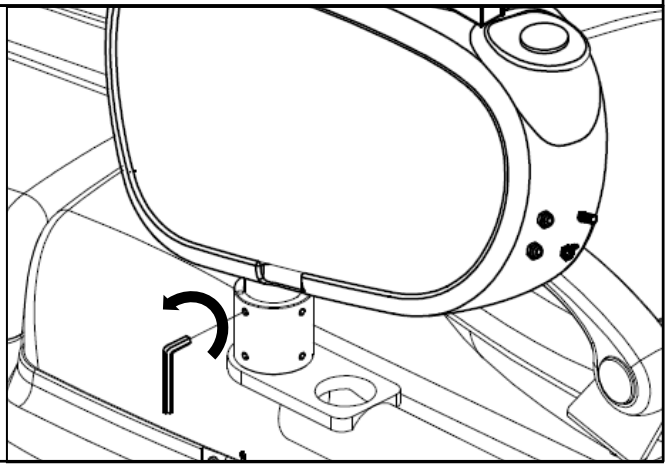

Figure 12

4. Rotate the box as shown.

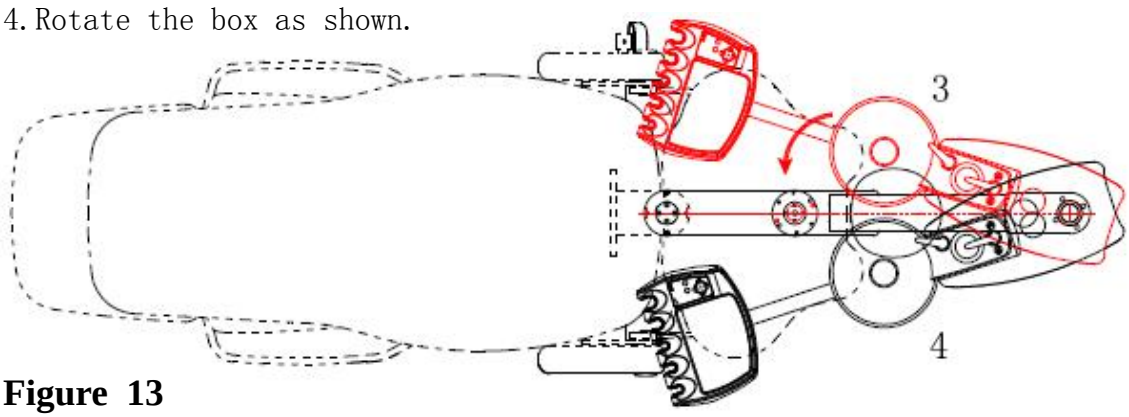

Figure 13

5. As shown, rotate the connecting arm to the appropriate use position.

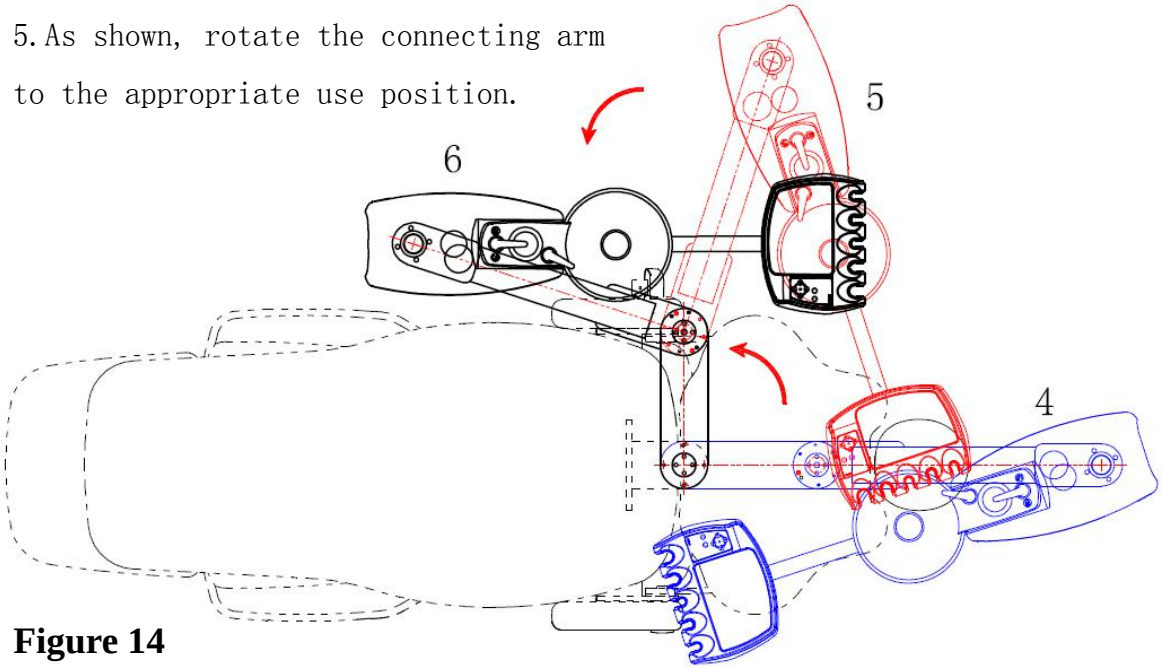

Figure 14

6. Tighten the screws on the connecting arm and the screws on the water unit.

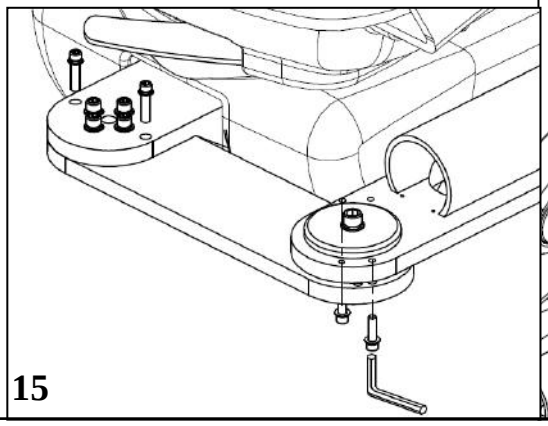

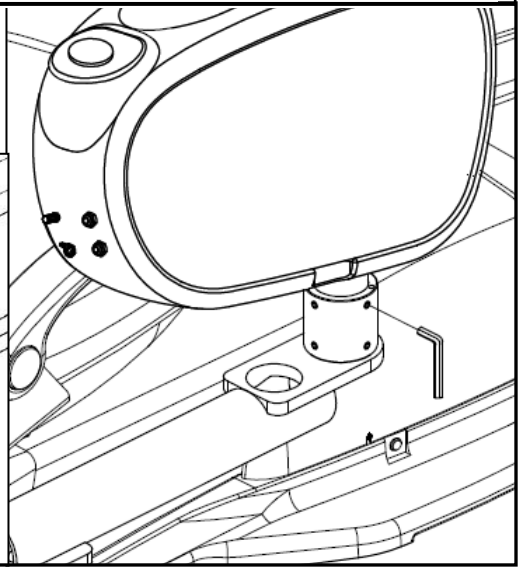

Figure 15

6.2 Install assistant's control

Figure 16

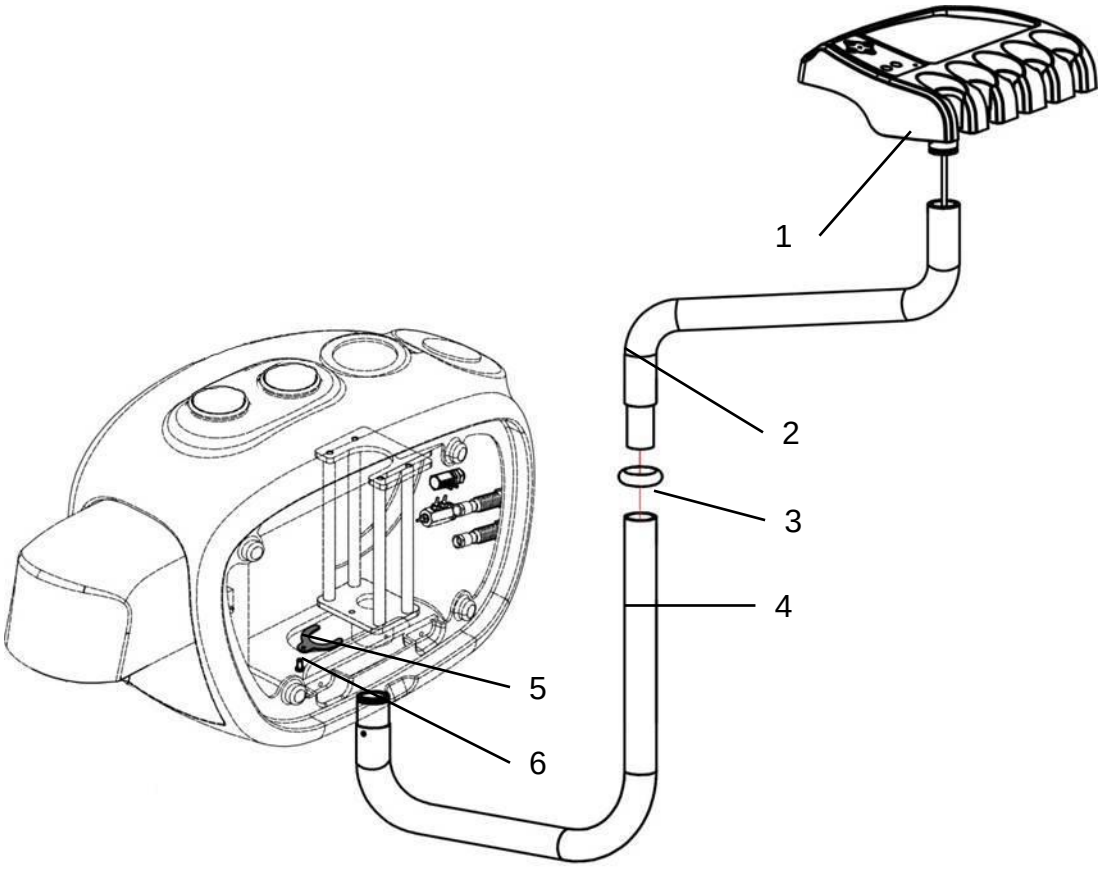

1	Assistant tray
2	Upper part of assistant arm
3	Cosmetic ring
4	Lower part of assistant arm
5	Clip
6	M5*12 outer hexagon cross recessed bolt group

1. The Assistant 's control installed to the Assistant arm, Upper.

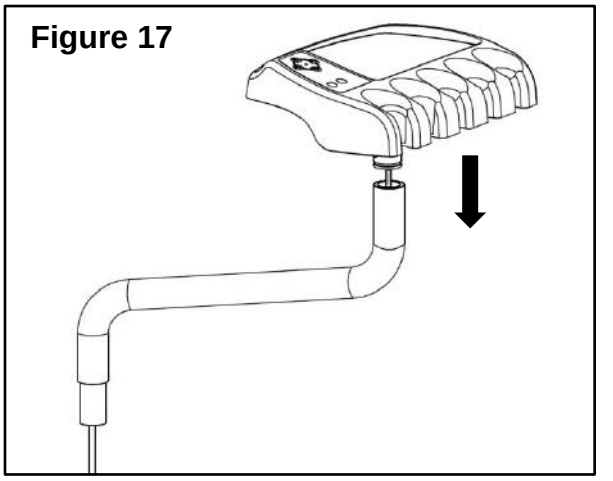

2. Pull the guide rope to make the wire pass through the cosmetic ring and the lower assistant arm. Then joint the two parts of assitant arm together.

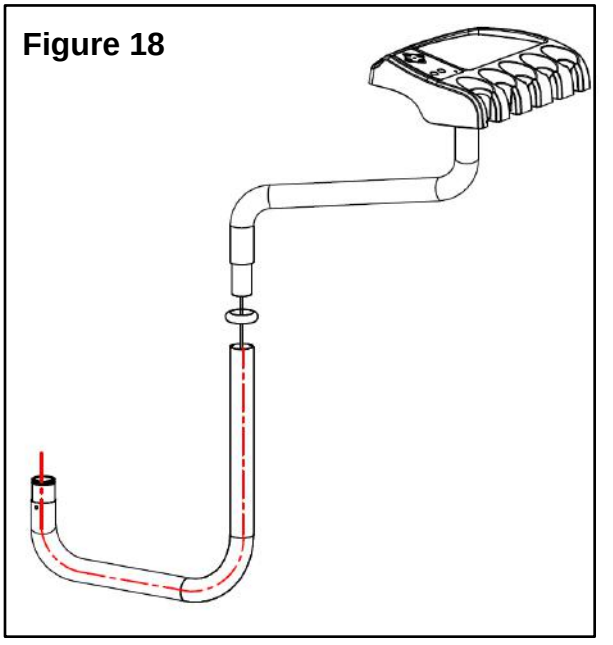

3. Install the unit to side box by inserting the arm to the mounting hole on the bottom of sidebox.Then fix the arm with a clip and fasten the clip with a M5*16 Philip's pan head screw.

Figure 19

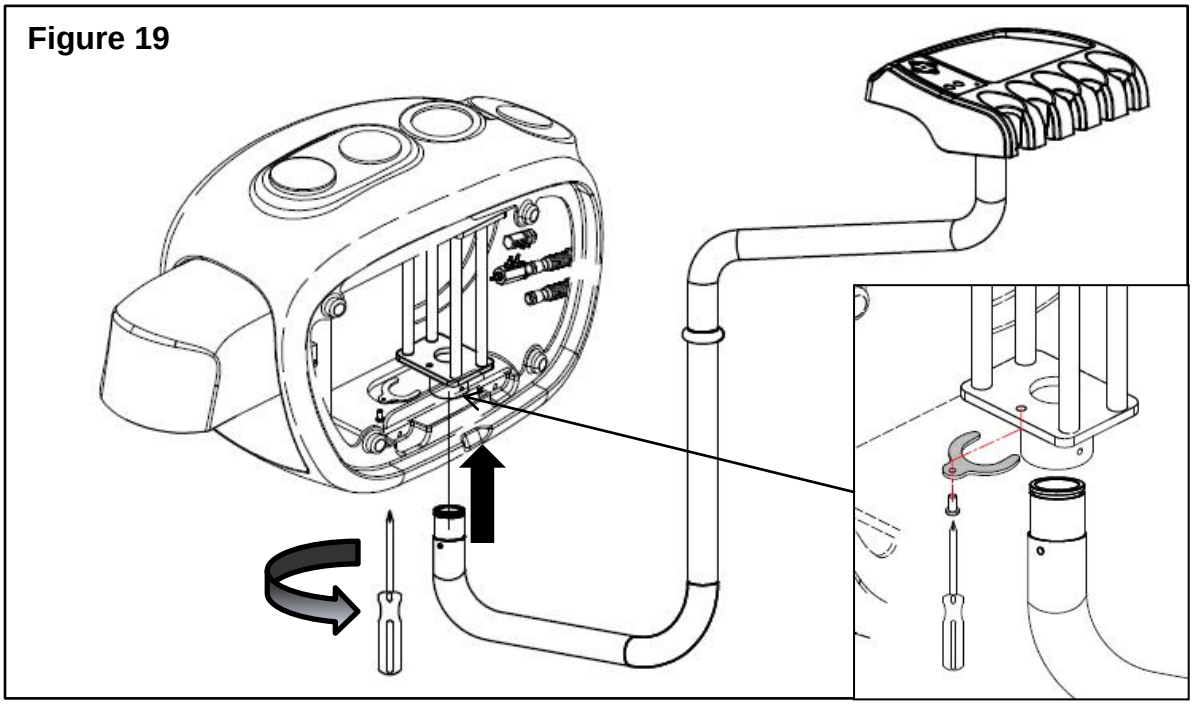

4. Wire connection. Connect terminals of the reserved wire and of the wire from assistant's control.

Figure 20

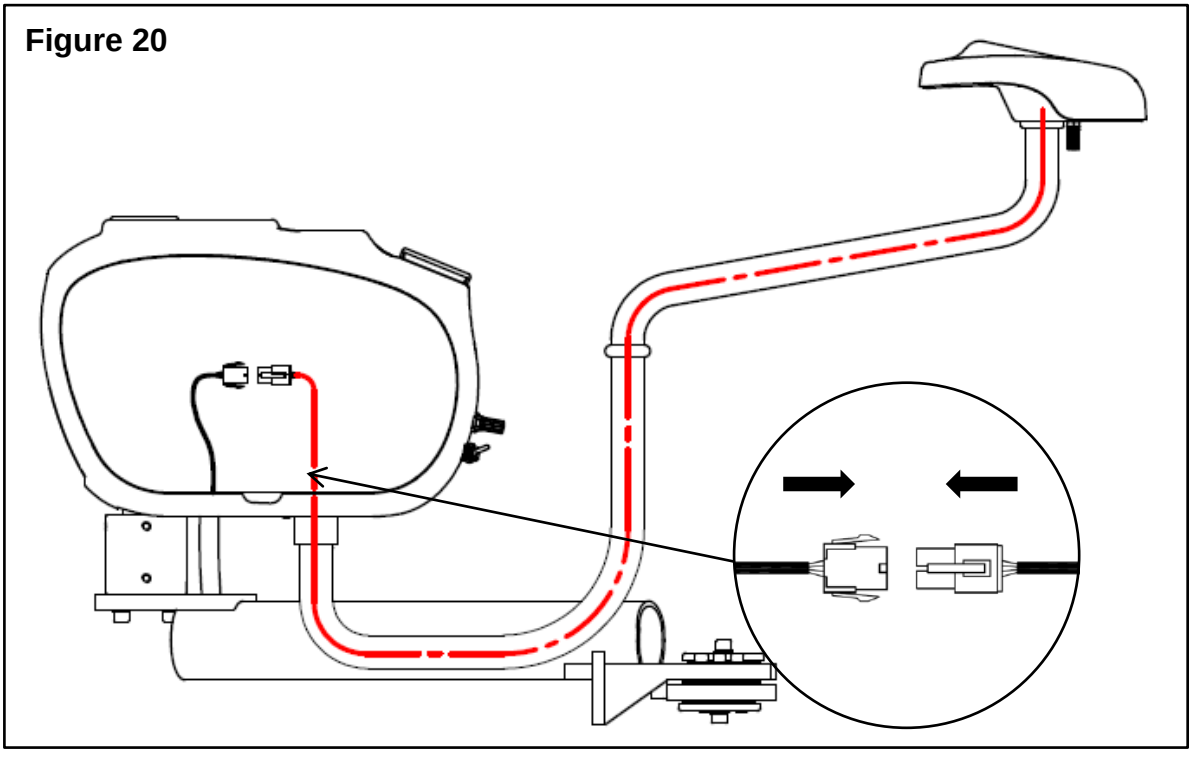

6.3 Install cuspidor

Notice: Please ignore this step if there is no cuspidor configuration.

Figure 21 **Compositions**

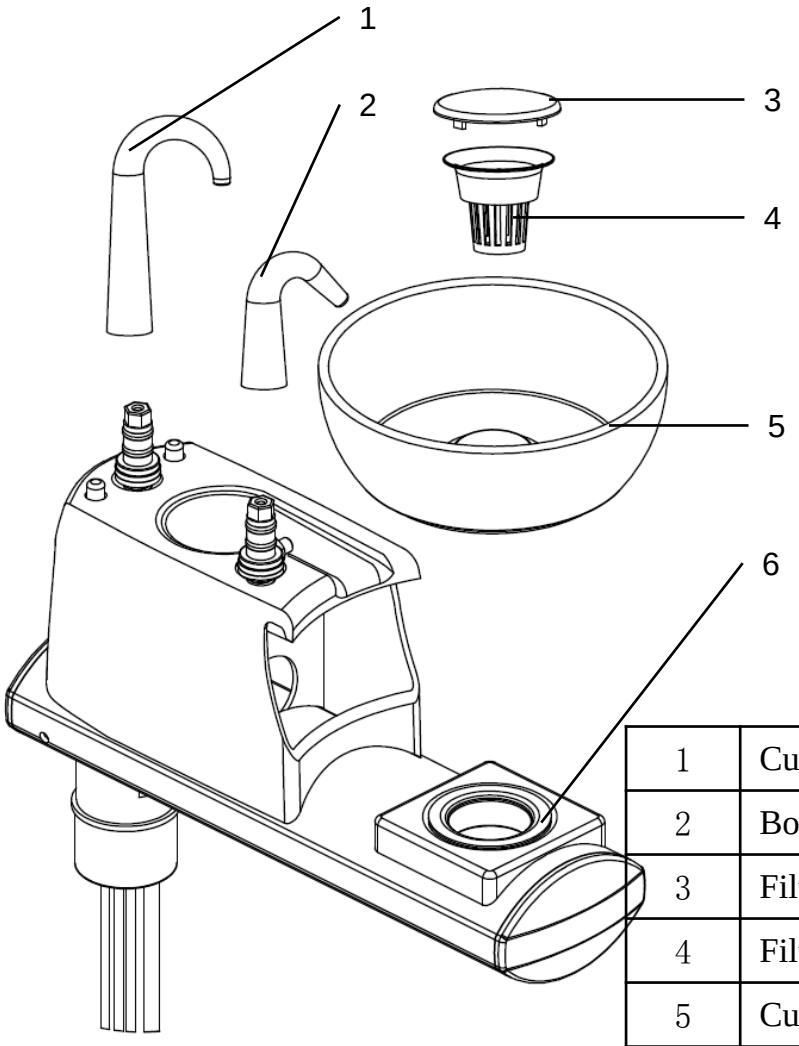

1	Cup filling nozzle
2	Bowl rinsing nozzle
3	Filter cap
4	Filter screen
5	Cuspidor bowl
6	Cuspidor body

1. Pass the tubes through the mounting hole and place the connecting shaft into the mounting base .

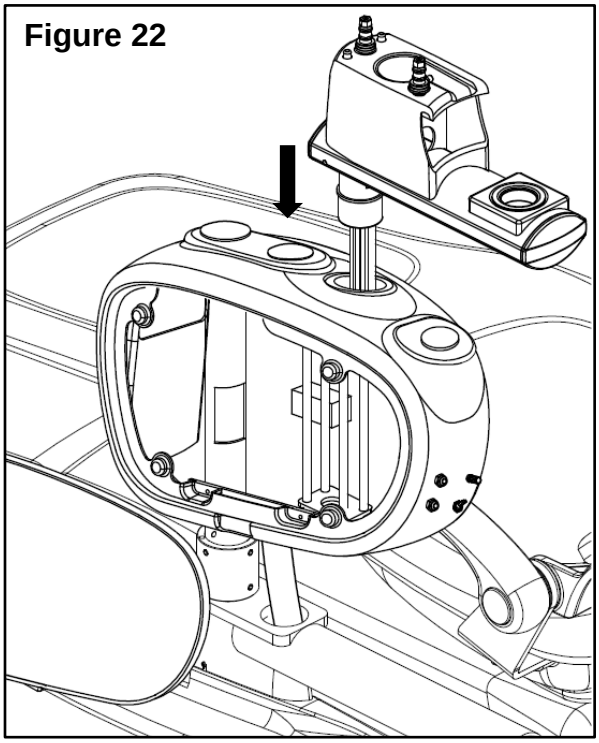

2. Place the cuspidor bowl to its position and fix it on its upper edge.

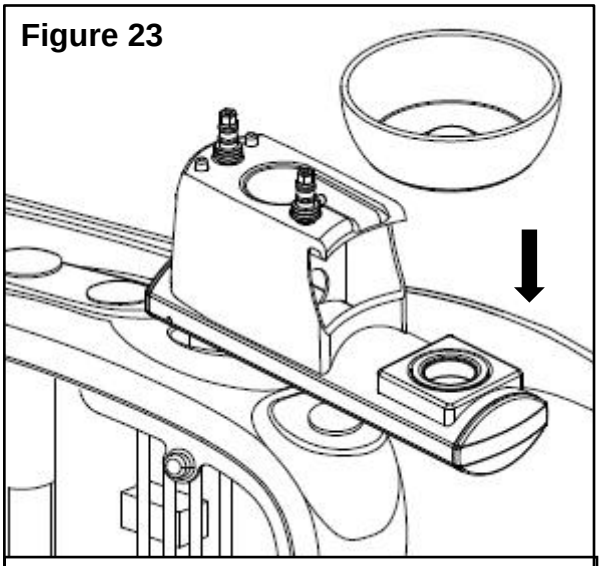

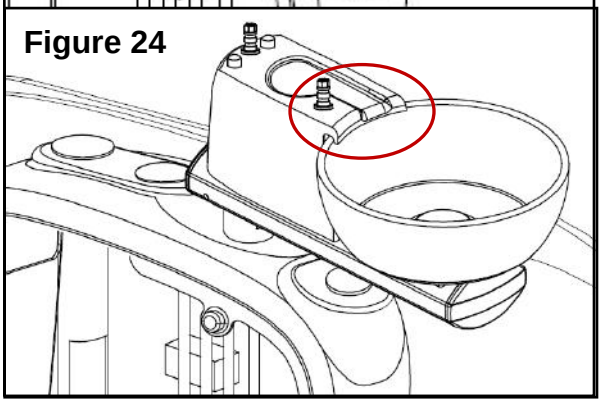

3. Mount the cup filling nozzle,the bowl rinsing nozzle, the drian cup and the cap as the figure shown.

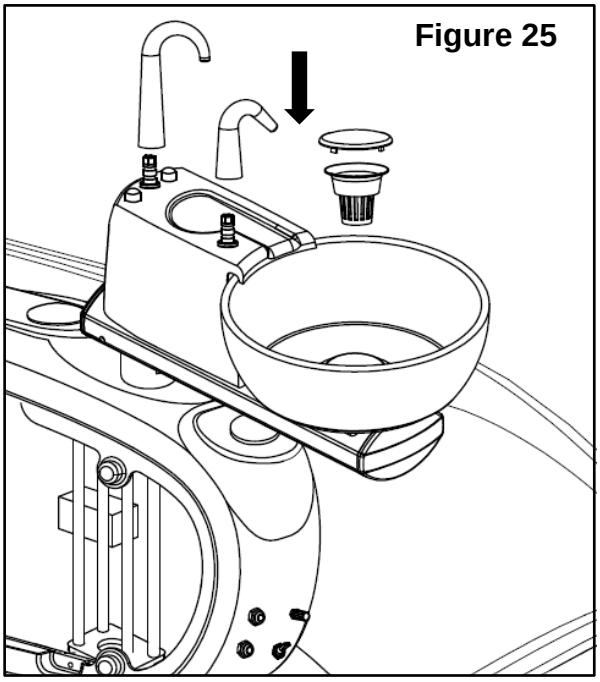

4. Connect the tubes and cover the side box. (the connection is shown in the next page）

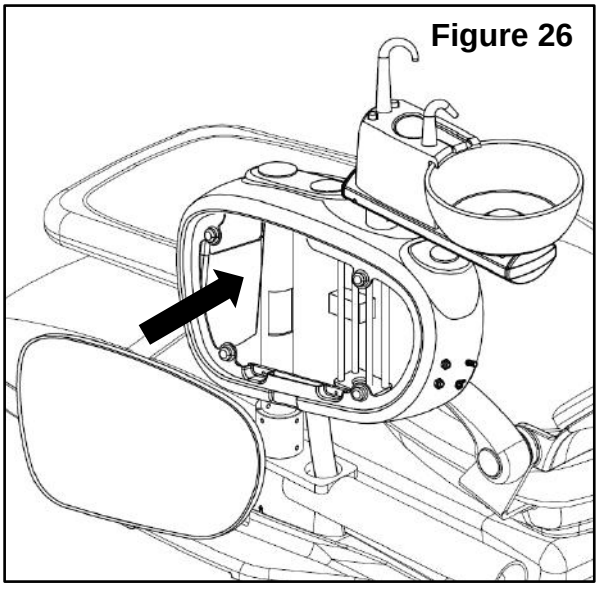

3. Line connection

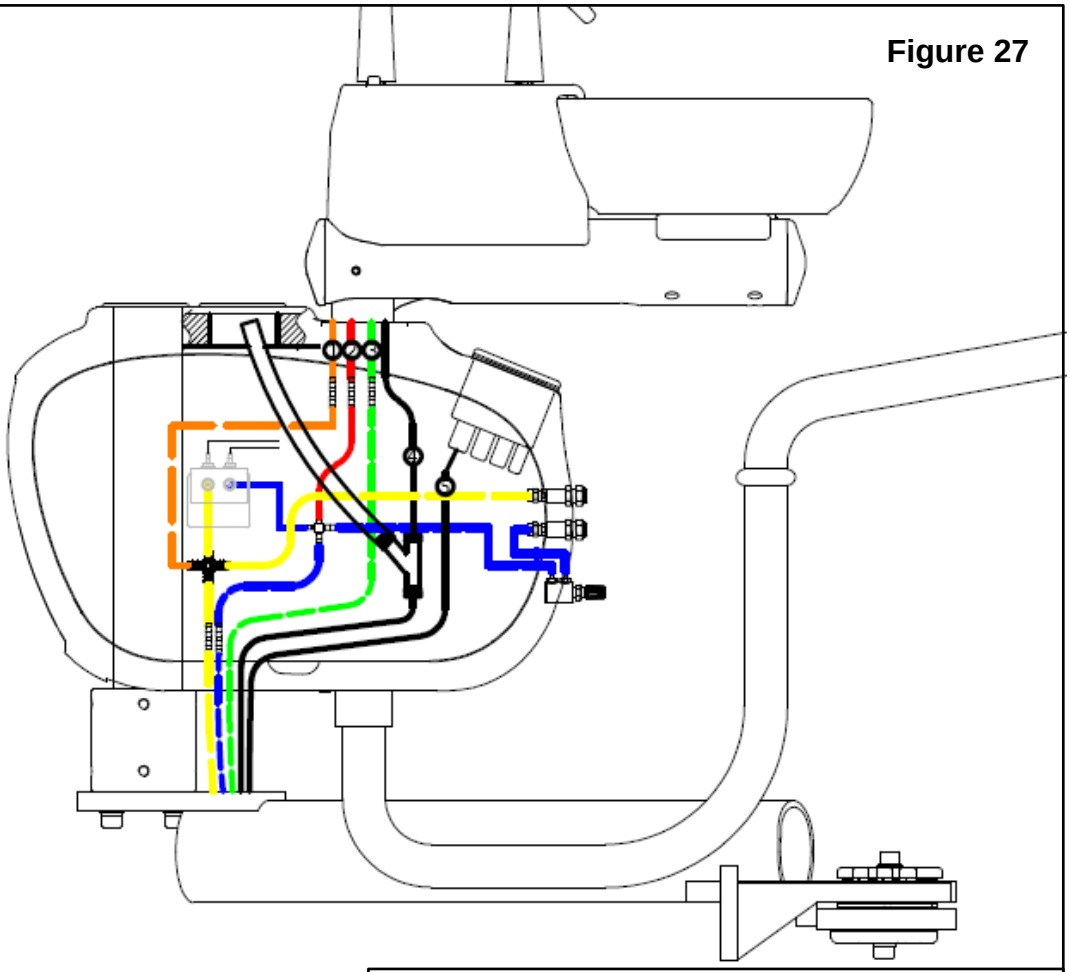

1. 1/4" Orange, connect to cuspidor
2. 1/4"Red, connect to cuspidor
3. 1/4"Green, connect to cuspidor
4. Drainage pipe, connect to cuspidor
5.Drainage pipe, connect to filter
6. 1/4"Yellow, connect to side box
7. 1/4"Blue, connect to side box

Note: the cuspidor inlet pipe should be inserted into the aluminum socket of the side box.

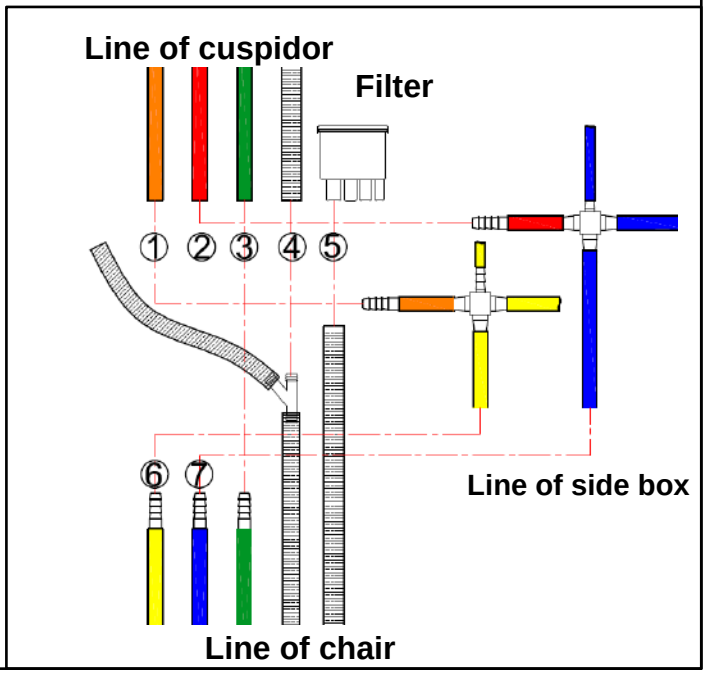

6.4 Installation of delivery system

6.4.1 Install the rotary arm

1. Release the M10*30 screw of the connecting plate, mount the rotary arm to the front mounted connecting plate as the figure shown, then fasten the screw.

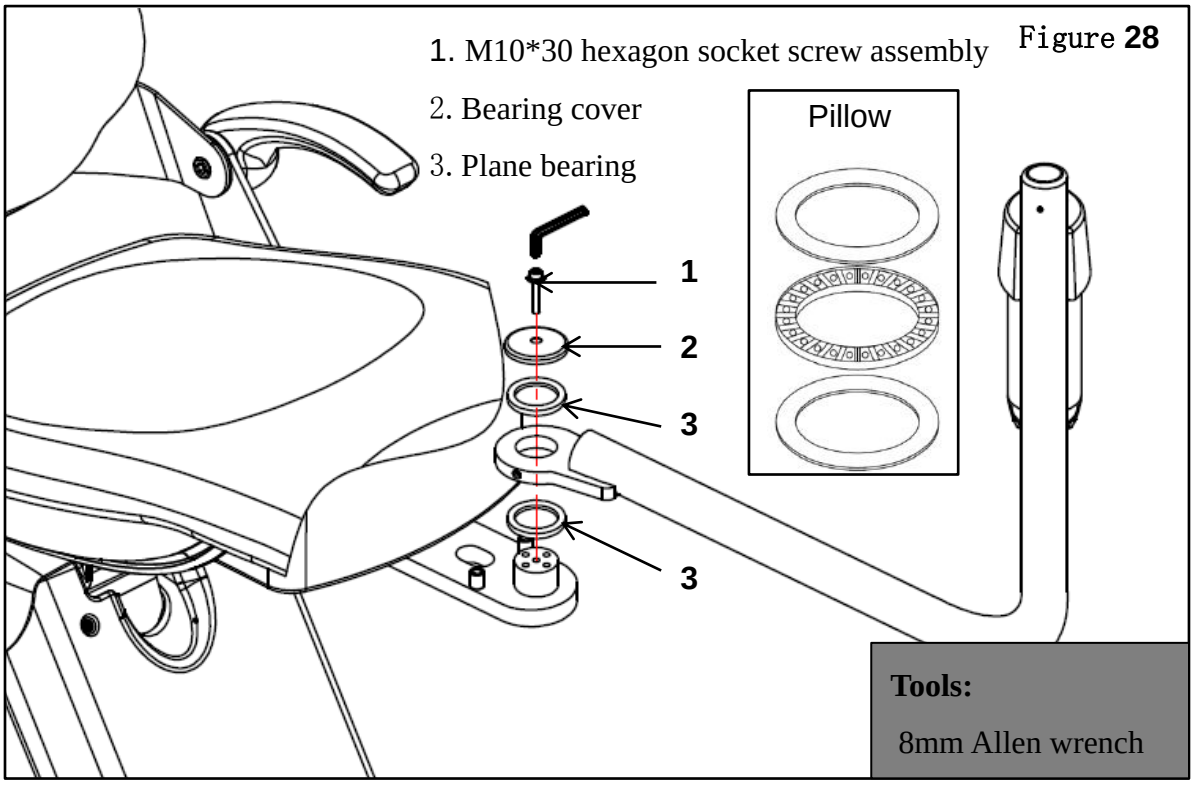

Figure 28

2. Assure the levelness of the rotary by regulating the four screws on the connecting plate.

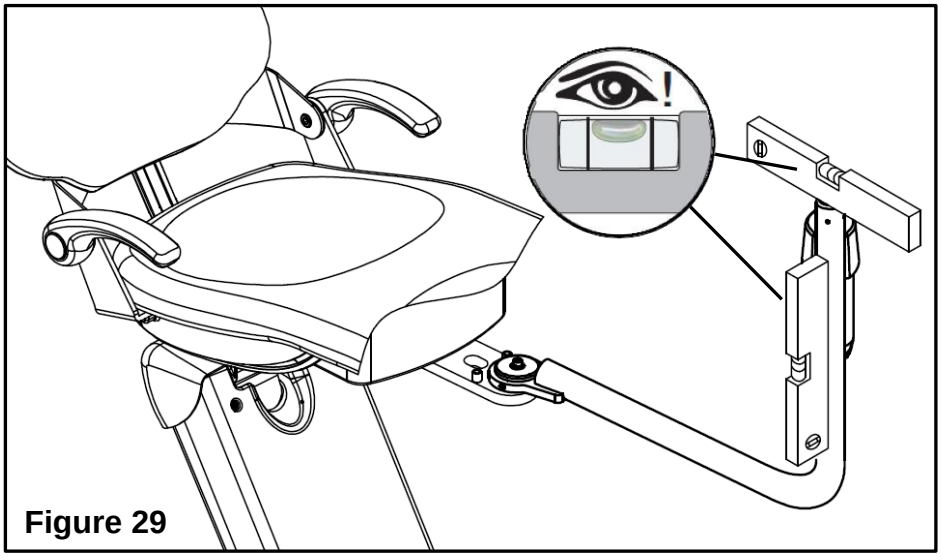

Figure 29

6.4.2 Install dentist unit

Compositions of dentist unit

Figure 30

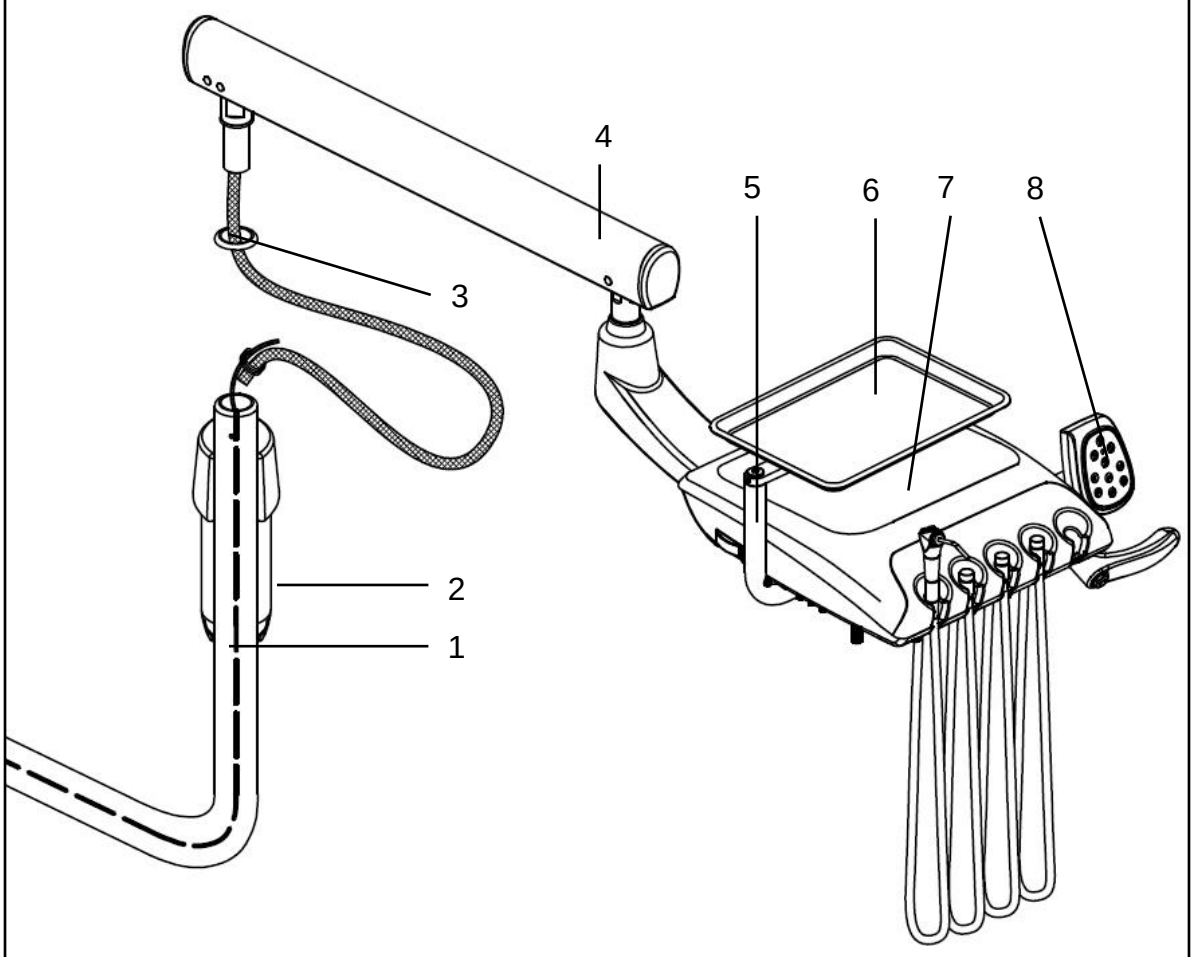

1	Rotary arm (front mounted)	5	Pole of tray
2	Water bottle (front mounted)	6	Tray
3	Cosmetic ring	7	DE-5 Delivery head
4	Level arm	8	Touch Pad

1. Remove the dentist unit after the delivery head turn around, with the Allen screw in one M6*20 to fix the delivery head and balance arm, prevent rotation.

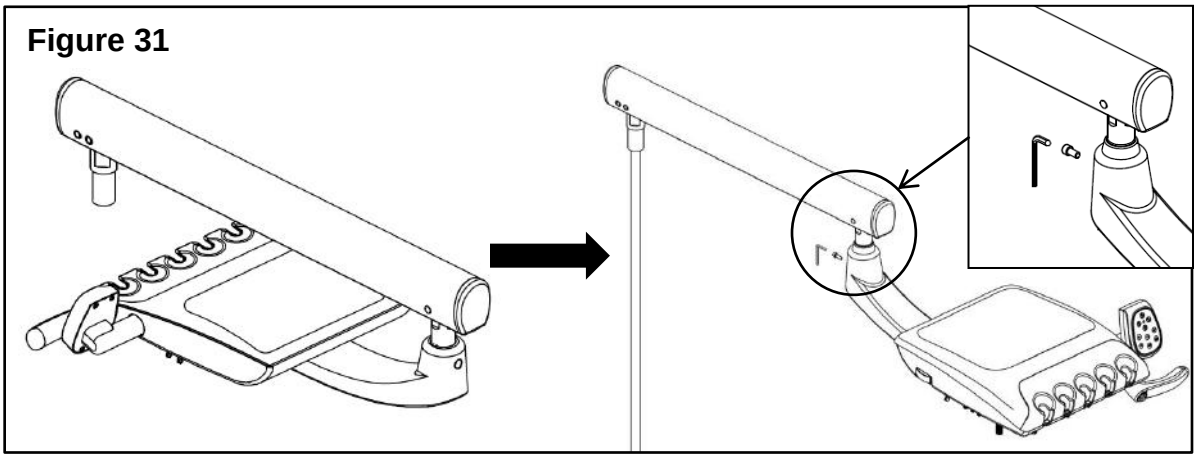

2. Pass the tubes of dentist unit through the cosmetic ring, tie the tubes with the guide rope, then pull the guide rope and let the tubes route through the rotary arm and approach to the wter unit interior. Joint the level arm and rotary arm together.

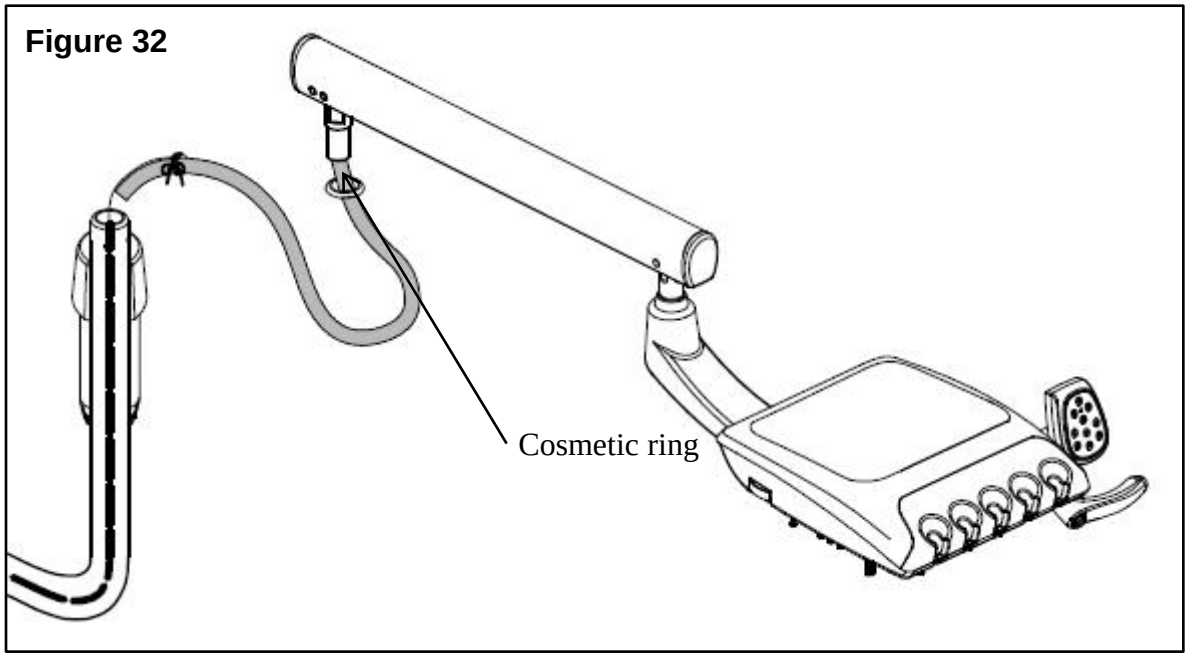

3. Pick up the treatment table kit and stick the balance arm shaft end into the rotating arm hole, screw down the 3pcs M6*8 inner hexagon screws (adjust the screws to get proper damping force), and cover with decorative cap.

Tools:
3mm Allen wrench

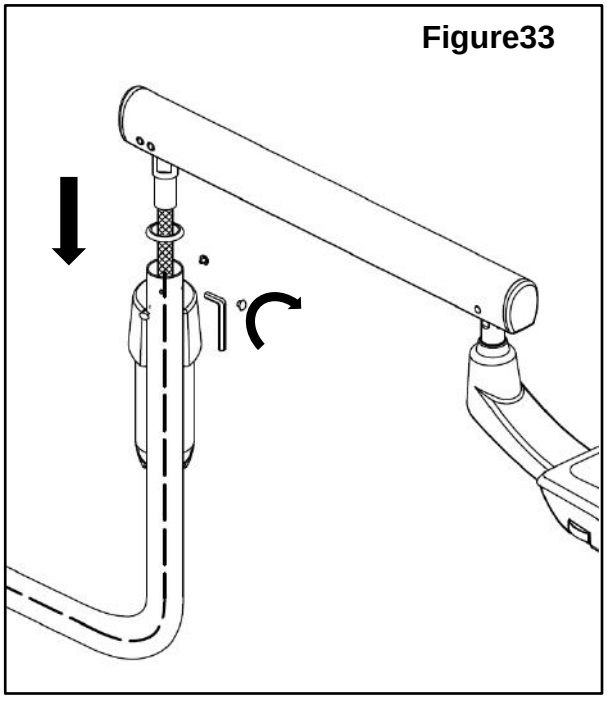

4. Install the tray holder to the bottom of delivery head, and fix with two M6*20 hex cap screws.

Tools:
5mm Allen wrench

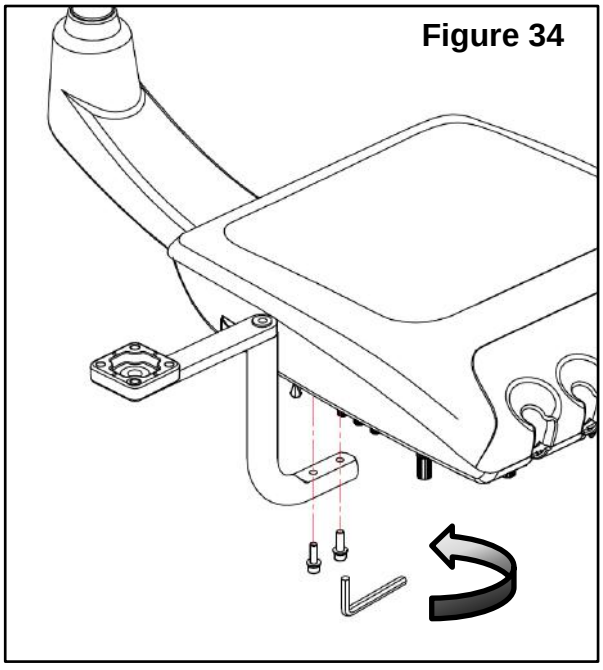

5. Install the tray supporter on the tray holder and fix with four M3*10 Philip's countersunk screws, put the anti-skid mat on the supporter, and then put the stainless steel instrument tray on the mat.

Tools:

Philip's screw driver

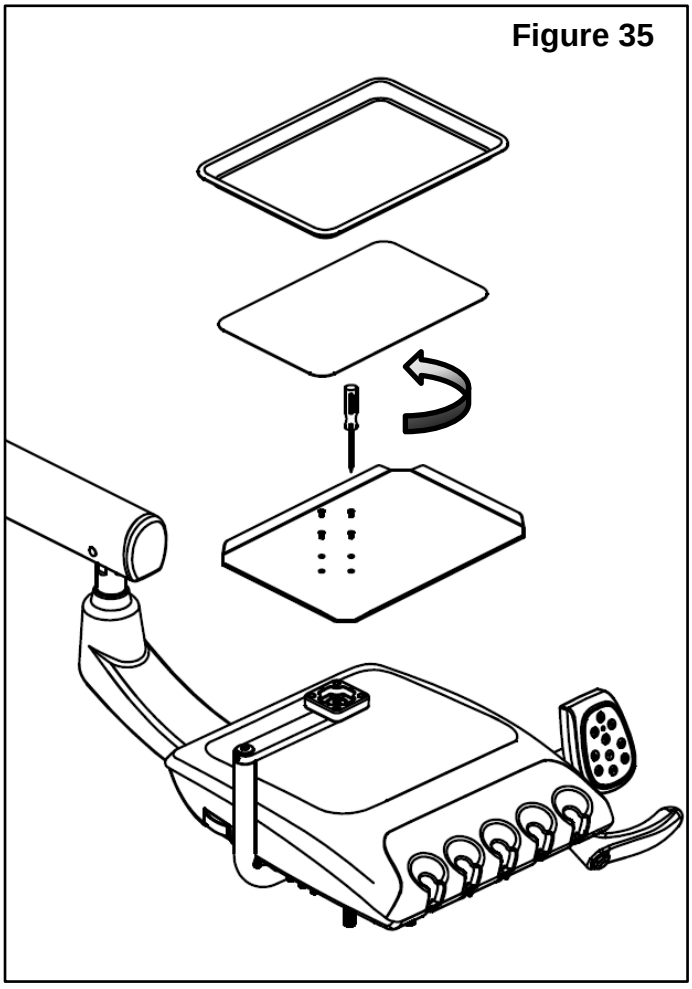

Figure 35

6. The tubes of the dentist unit and those reserved of the chair shall be connected by color, and close the cover after connection. Ignore the reserved wires,you have no need to connect them for there's no control panel on delivery head.

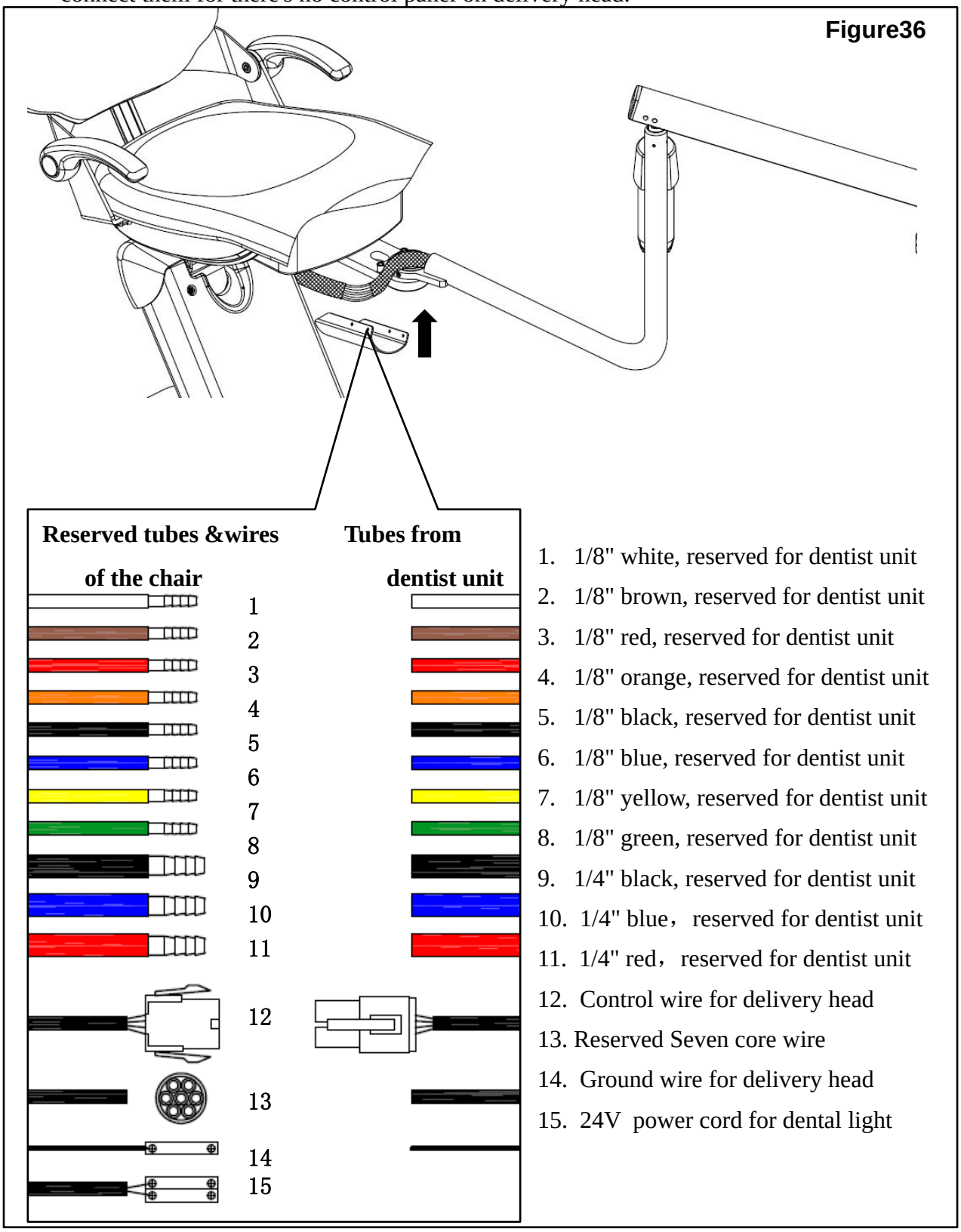

1. 1/8" white, reserved for dentist unit
2. 1/8" brown, reserved for dentist unit
3. 1/8" red, reserved for dentist unit
4. 1/8" orange, reserved for dentist unit
5. 1/8" black, reserved for dentist unit
6. 1/8" blue, reserved for dentist unit
7. 1/8" yellow, reserved for dentist unit
8. 1/8" green, reserved for dentist unit
9. 1/4" black, reserved for dentist unit
10. 1/4" blue，reserved for dentist unit
11. 1/4" red，reserved for dentist unit
12. Control wire for delivery head
13. Reserved Seven core wire
14. Ground wire for delivery head
15. 24V power cord for dental light

6. 4. 3 Adjust the level arm

1. Remove the screw caps, change the tightness of the screws to adjust the damping force of level arm.

Note: Loosen the screws in counterclockwise, tighten in clockwise.

Tools:
3mm Allen wrench

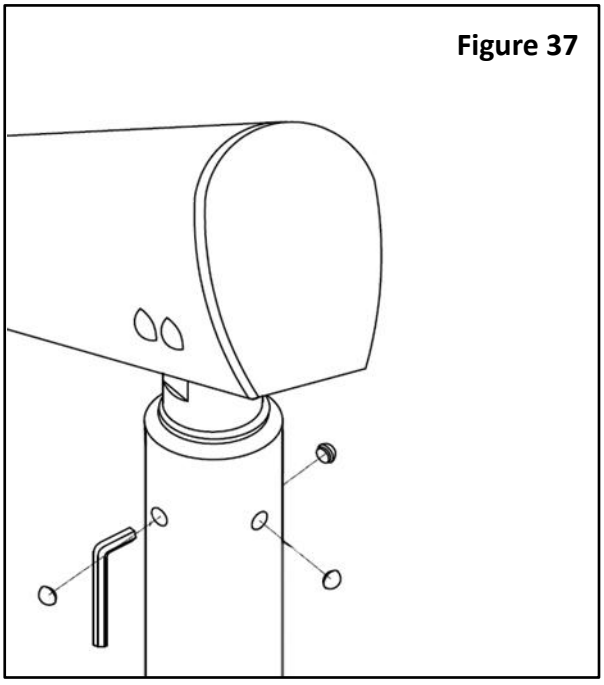

2. Remove the end cover of level arm, adjust the tightness of the screw to get suitable balance force.

Note: Loosen the screws in counterclockwise, tighten in clockwise.

Tools:
5mm Allen wrench

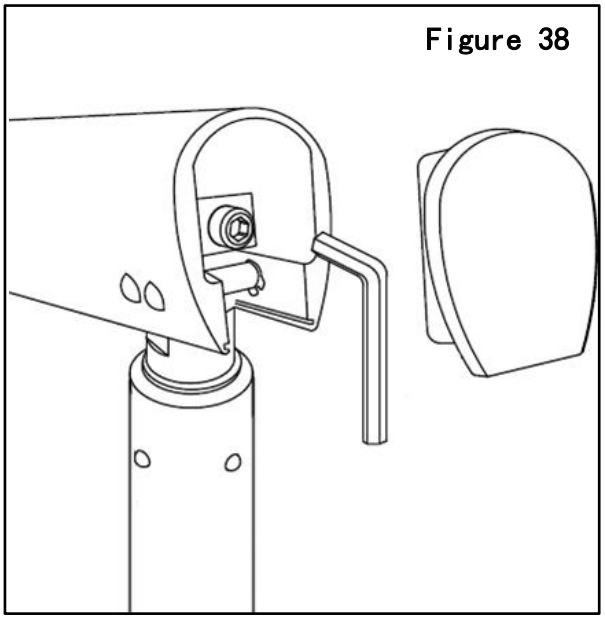

6.5 Install dental light（optional）

Notice：Please ignore this step if there is no lamp configuration.

Figure 39

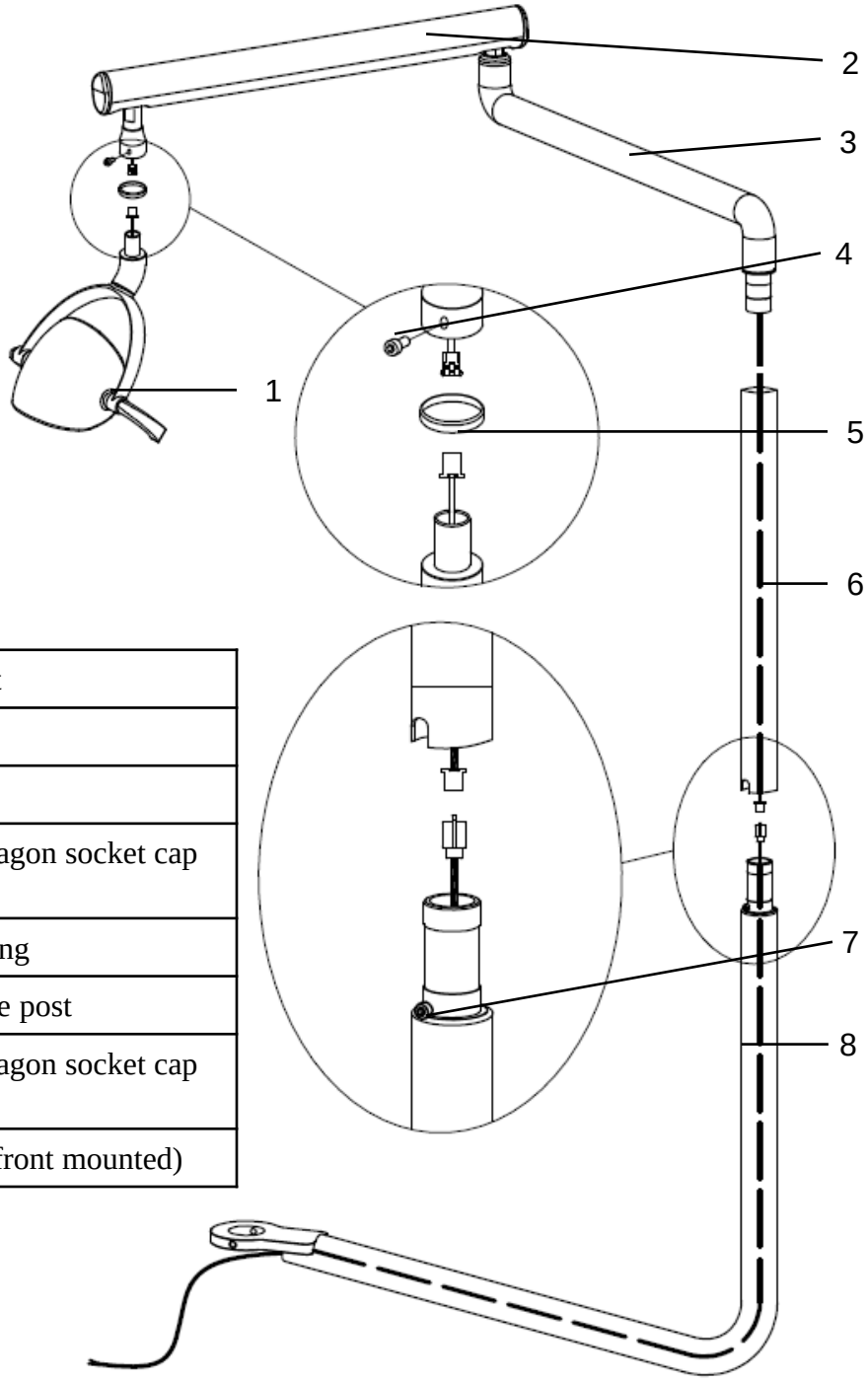

1	Dental light
2	Level arm
3	Rotary arm
4	M5*12 hexagon socket cap screw
5	Cosmetic ring
6	Intermediate post
7	M5*10 hexagon socket cap screw
8	Lamp arm(front mounted)

1. Release the M10*30 screw of the connecting plate, mount the lamp arm to the front mounted connecting plate as the figure shown, then fasten the screw.

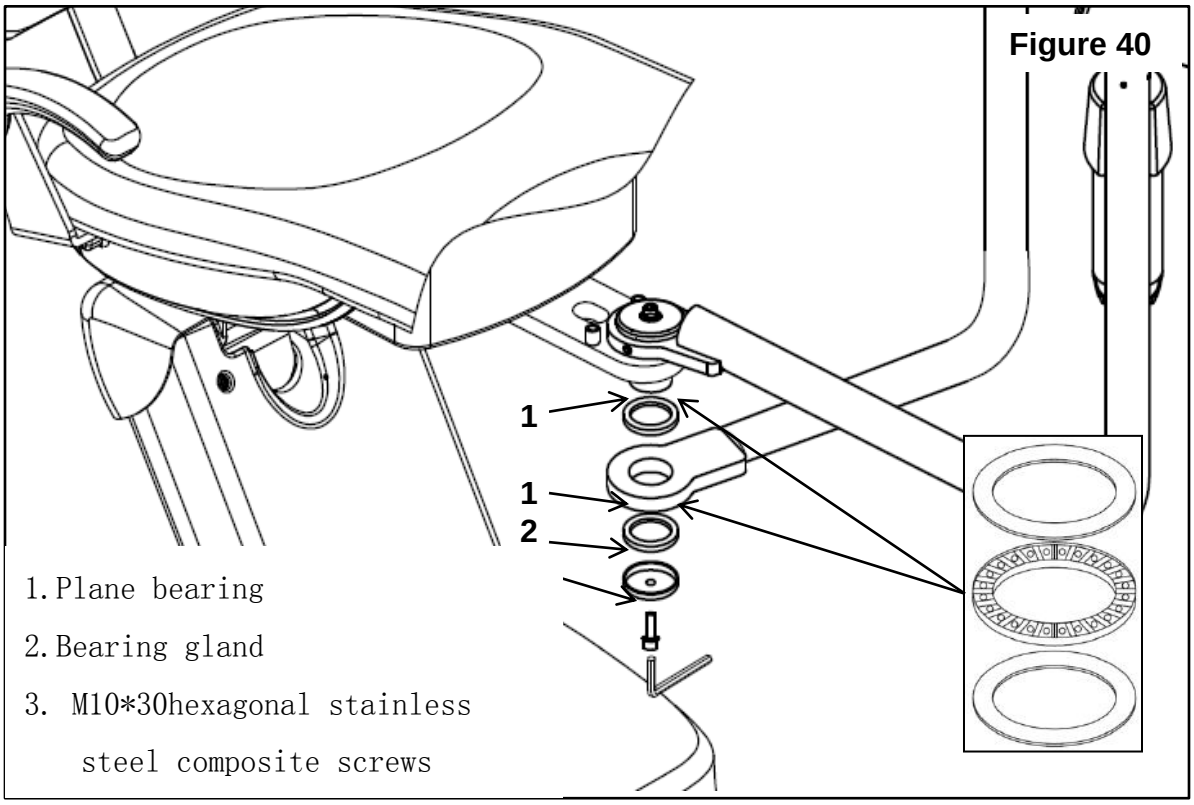

2. Let the guide line route though the intermediate post as the figure shown, the post end which has a jag should be upward.

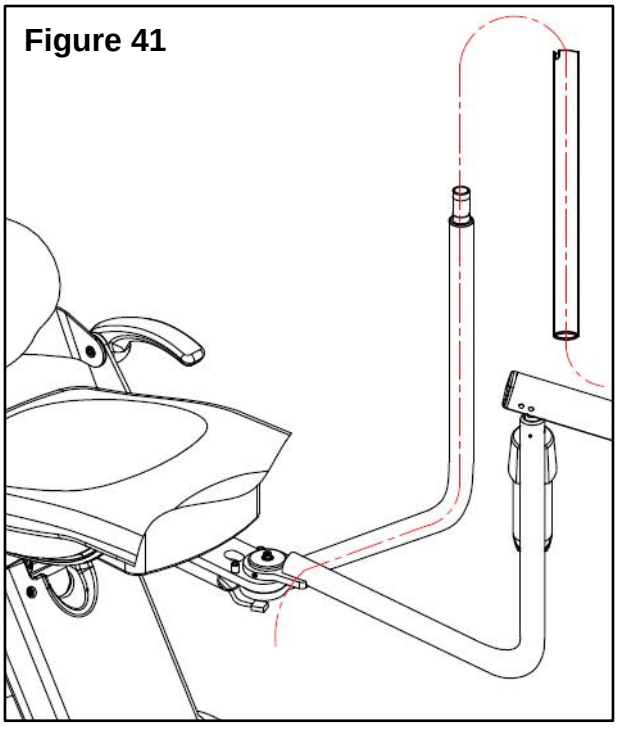

3. Joint the intermediate post and the rotary arm, the jag on the post is screw position.

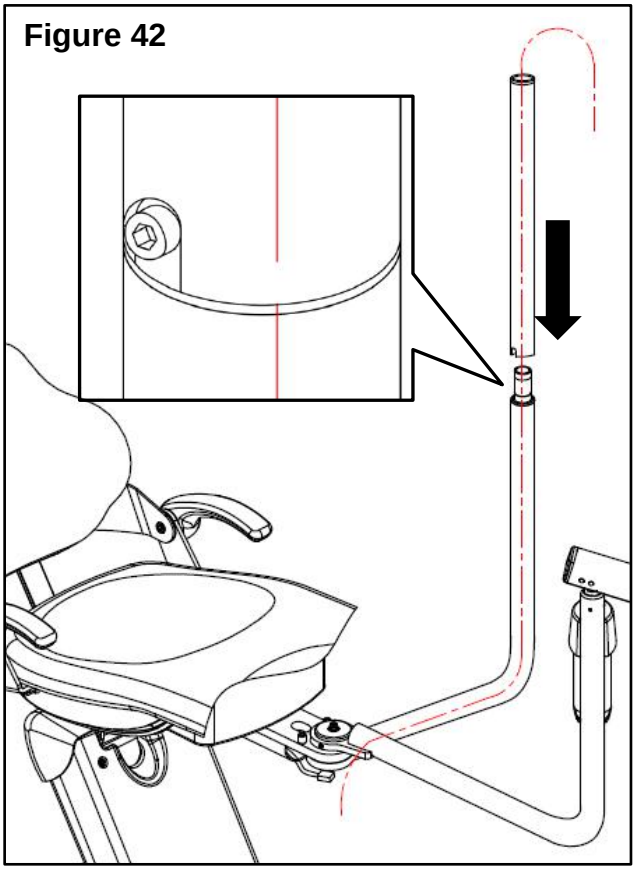

4. Joint the level arm and the rotary arm, take them out from the carton.

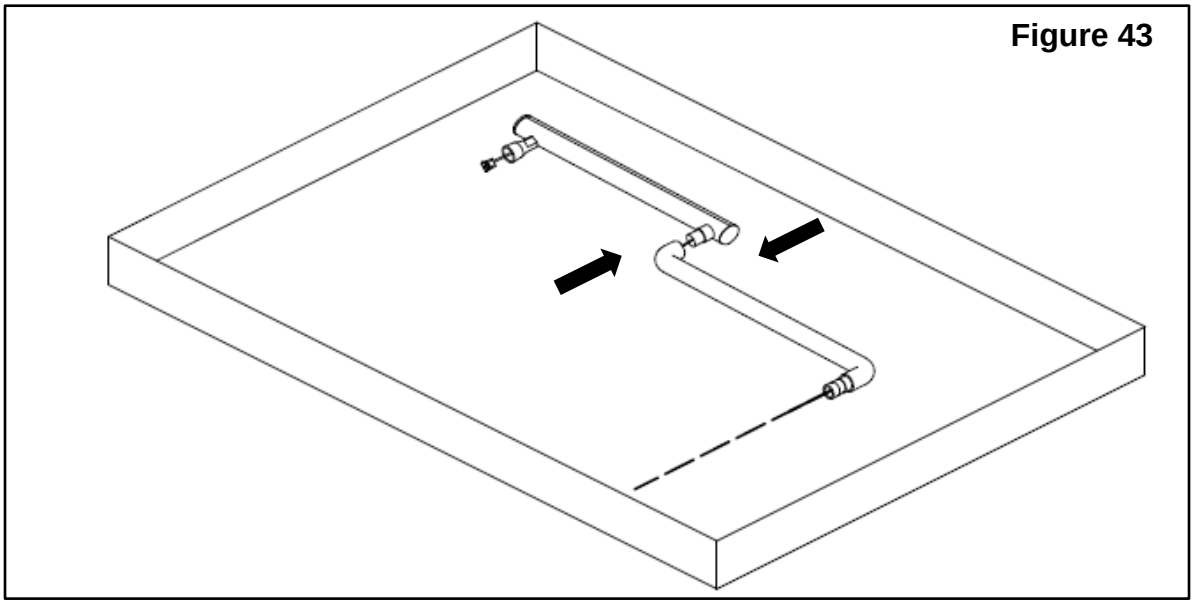

5. Tie the light wire and the guide line together, pull the guide line to lead the wire pass through the post and the lamp arm.

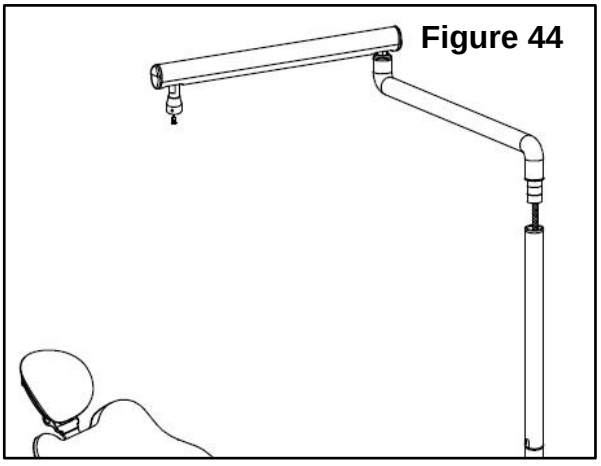
Figure 44

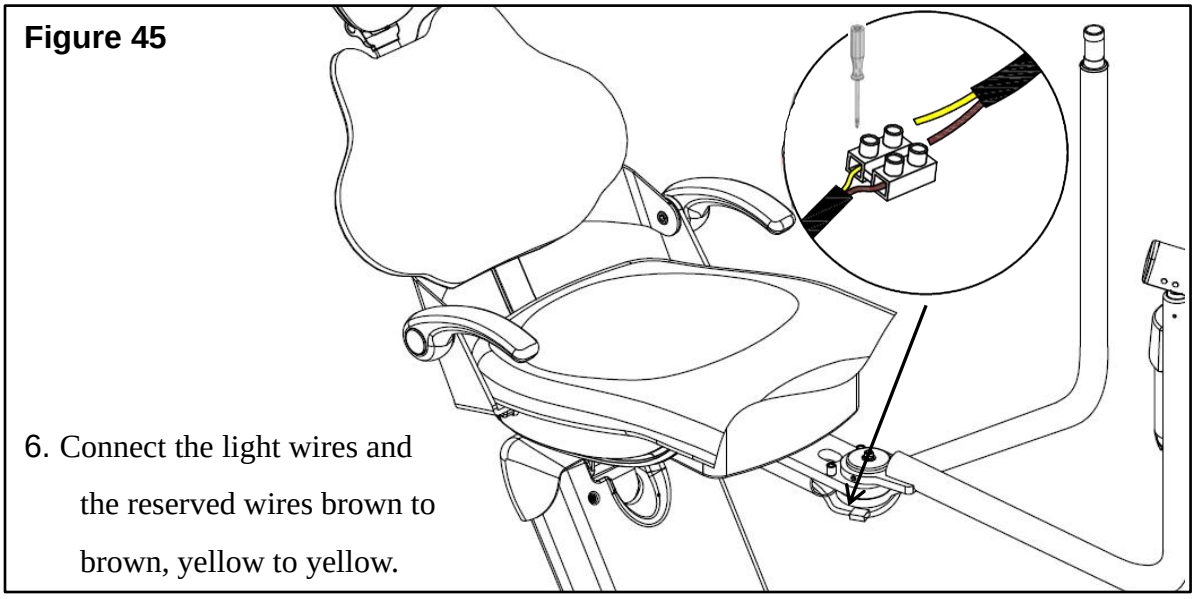
Figure 45

6. Connect the light wires and the reserved wires brown to brown, yellow to yellow.

7. Take out the lamp from the package, pass the wire through the cosmetic ring and connect the wire terminals, then joint the light head and the level arm together, fully fasten with a M5*12 screw.

Note: Hold the lamp, do not drop it to avoid damage.

Tools:

4mm Allen wrench

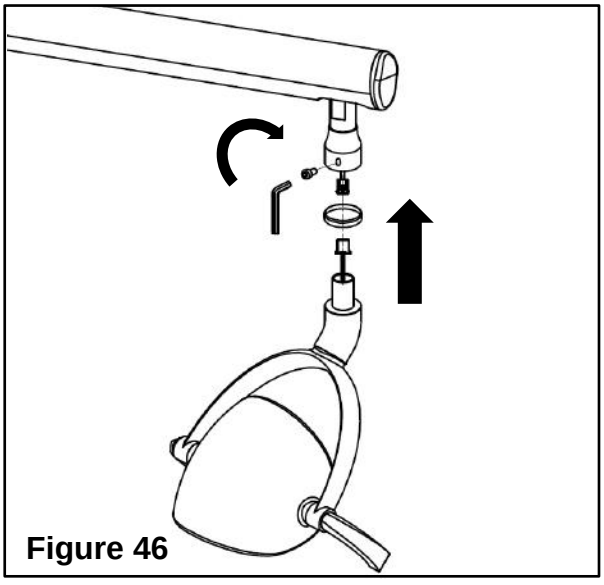
Figure 46

6.6 Install foot control

1. Put the foot control tube through the left hole behind the bottom of the chair and out of the other end of the hole.

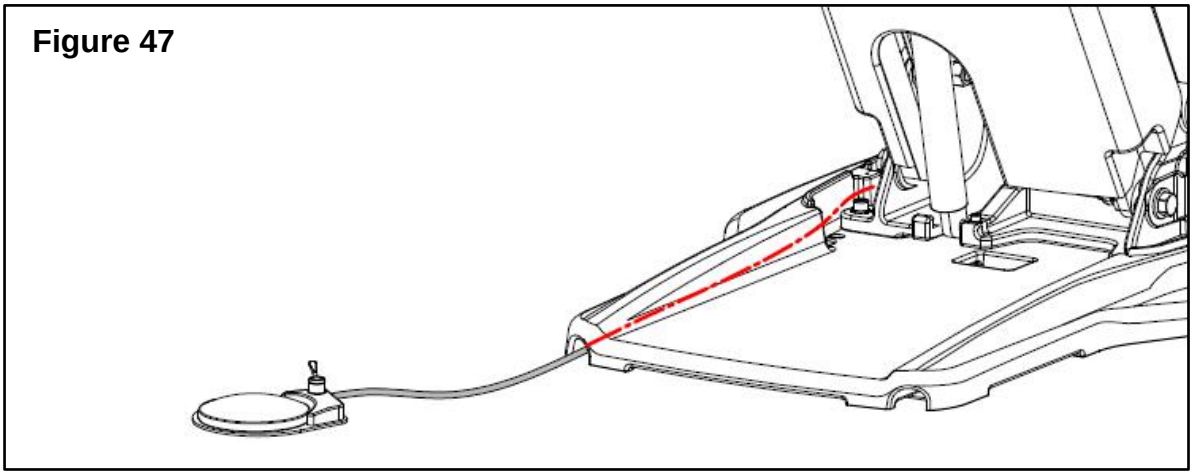
Figure 47

2. Pipe the oil pot by the side of the pipeline around the confluence with the pipeline bundle tied with the tape.

3.The pipe is covered with corrugated pipe, and the two ends of the corrugated pipe are respectively covered to the chair and the junction box card. Finally close the cover.

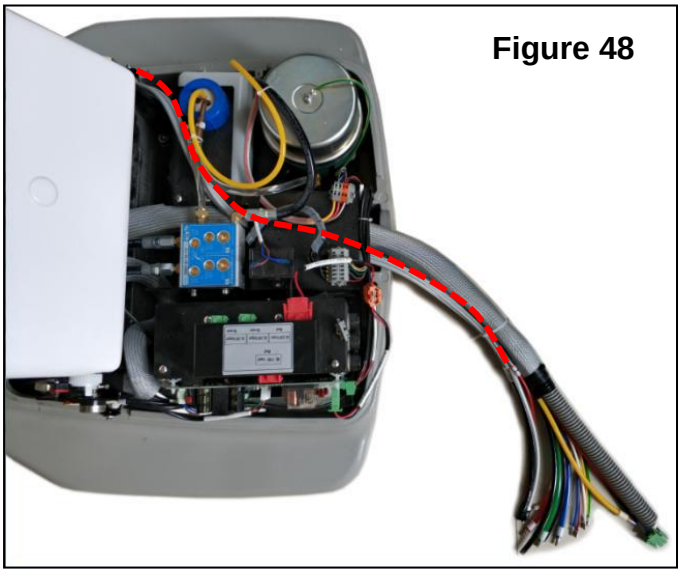
Figure 48

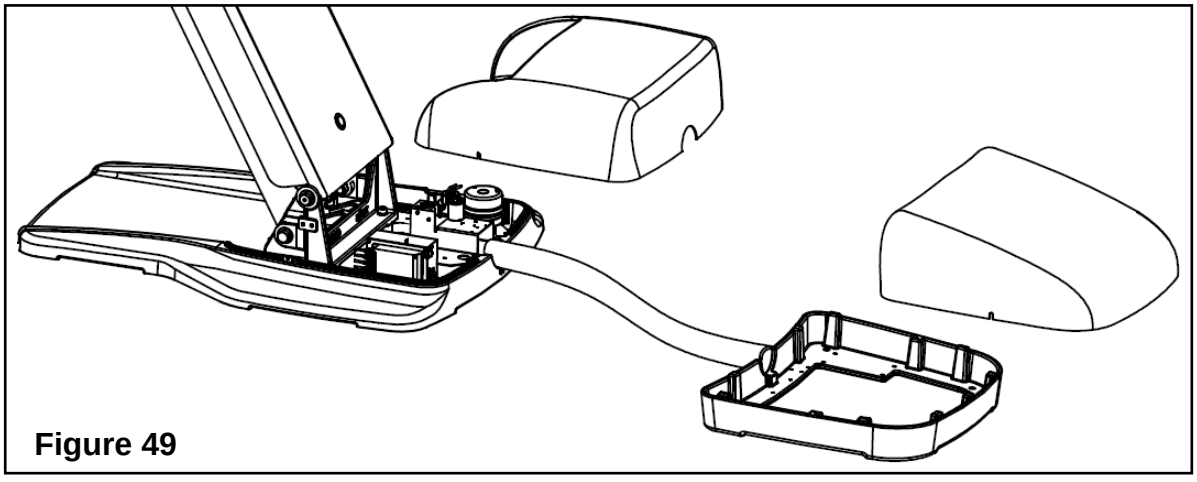
Figure 49

6.7 Junction box connection

Figure 43

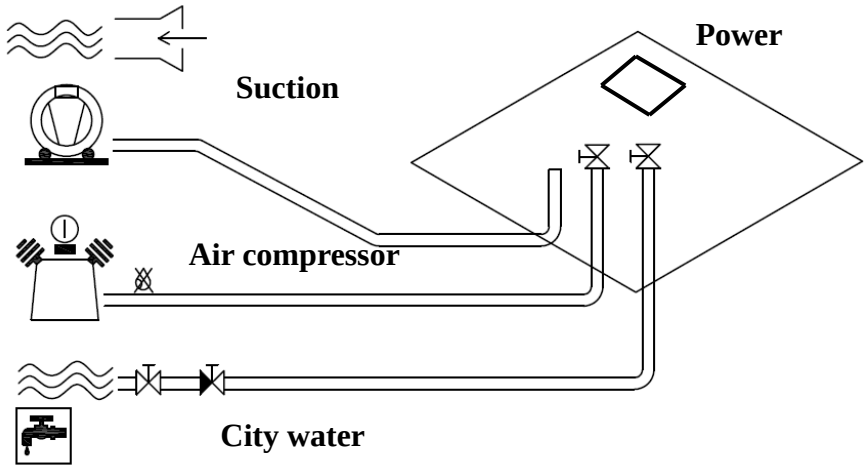

Figure 44

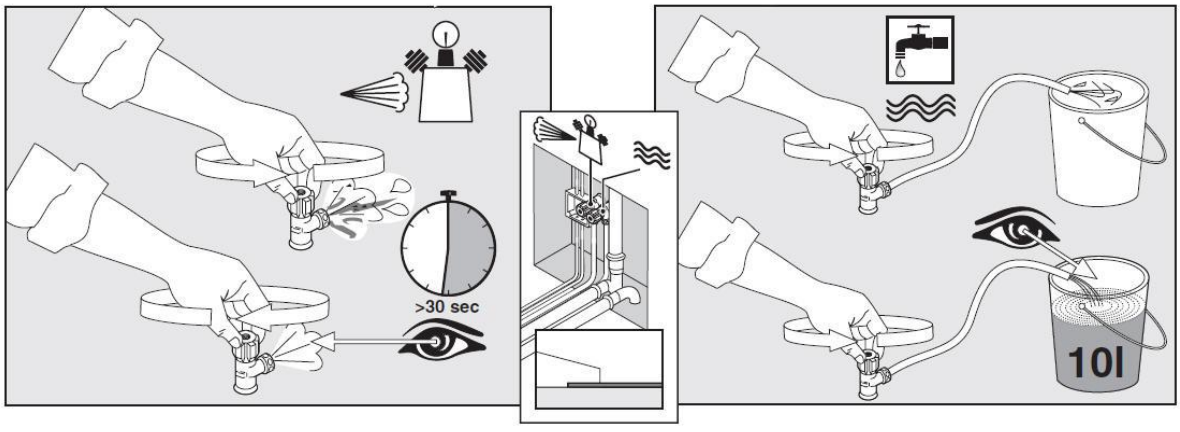

The tubes & wires are in the tubing zone or inside the external junction box, their places depend on your chair configurations.

1. Open the valves to exhaust water and air, clean the tubes before connecting.
2.. Open the cover of the junction box，connect the air-in，water-in and water-out .
3. Take out the power box of dental light ,connect the power cord to the power box, and plug into the socket.
4. Close the cover after making sure they are well-performed.

Connect the pipe of the junction box and the chair according to the color, connect the pipe of the foot control with the reserved pipe on the chair and the pipe of the junction box valve according to the color.

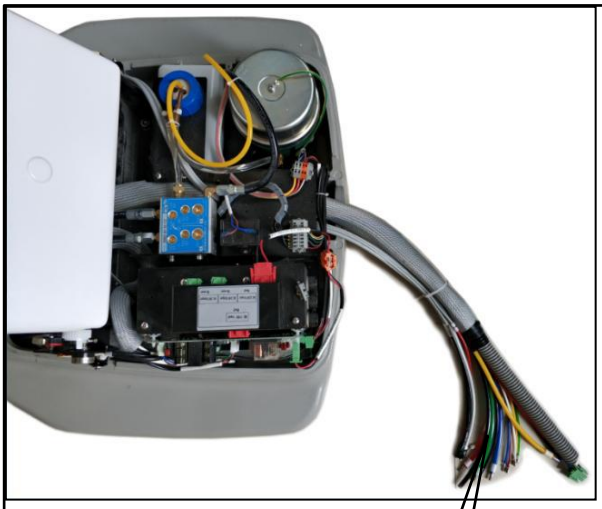

1. 1/8" white, reserved for dentist unit
2. 1/8" brown, reserved for dentist unit
3. 1/8" yellow, reserved for dentist unit
4. 1/8" green, reserved for dentist unit
5. 1/8" black, reserved for dentist unit
6. 1/8" orange, reserved for dentist unit
7. 1/4" blue, reserved for side box
8. 1/4" Green, reserved for side box
9. 1/4" Yellow, reserved for side box
10. 1/8" Red, reserved for foot control
11. 1/4"Black, reserved for foot control
12. Drainage pipe, connect to cuspidor
13. Pressure suction pipe
14. Reserved seven core wire

A. Pipe for foot control

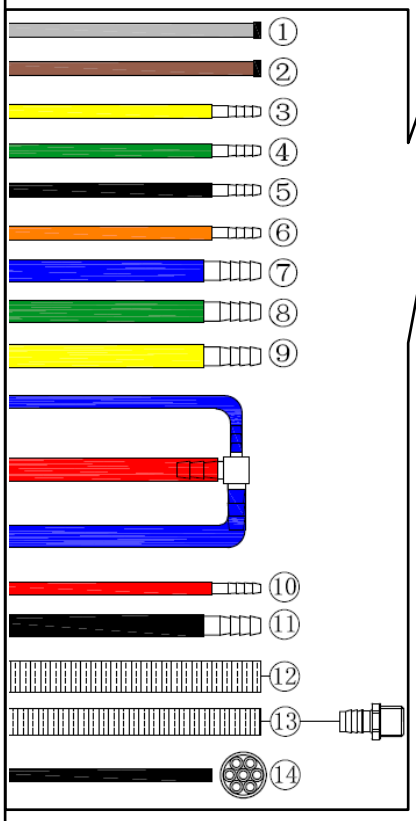

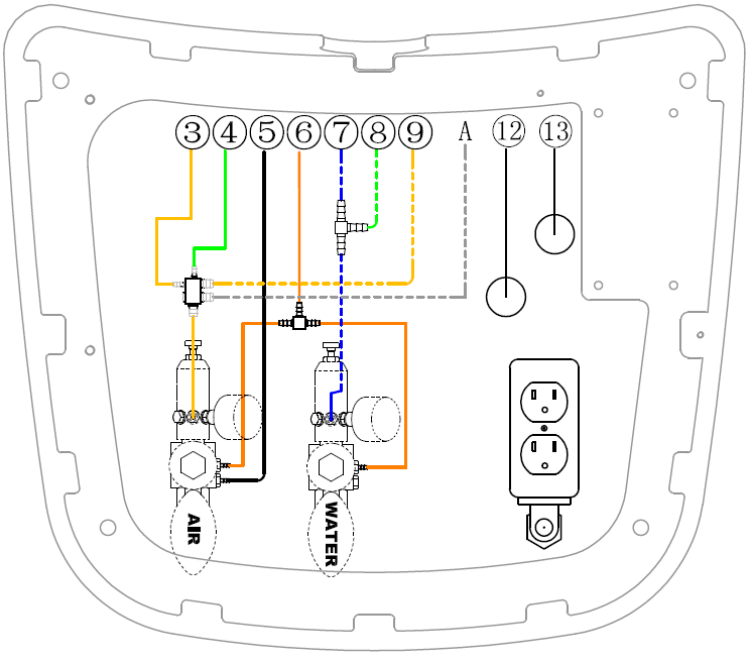

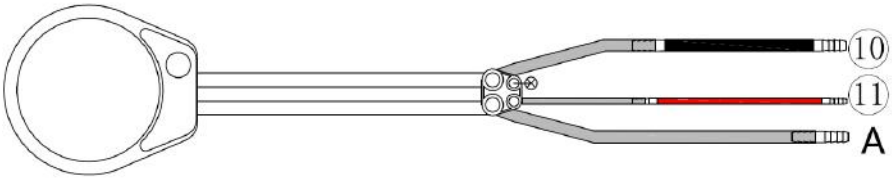

Figure 45

We reserve the right to make any alterations which may be due to technical improvements.

ADS Dental System Inc.

Add: 1590 S Milliken Ave., unit A, Ontario, CA 91761
Tel: (626) 620 0456
E-mail: ads@adsequip.com
http://www.adsequip.com/